COVER "A" OPENING POSITION	COVER "B" OPENING POSITION	FLANGED NUT LOCATION	TORQUE LOCATION (NOTE 3)	"NO TORQUE" LOCATION (NOTE 5)
C F	B D E	1 2 3	3	1 2

LTR	DATE	REVISION	CHK	APD
D	03/29/07	85414D-REDRAWN IN UG GMB		
E	08/31/07	000170EC/C - REMOVE USA FROM COVER BRK		
F	04/24/08	000463EC/D-CHG. NOTE 3 GMB		

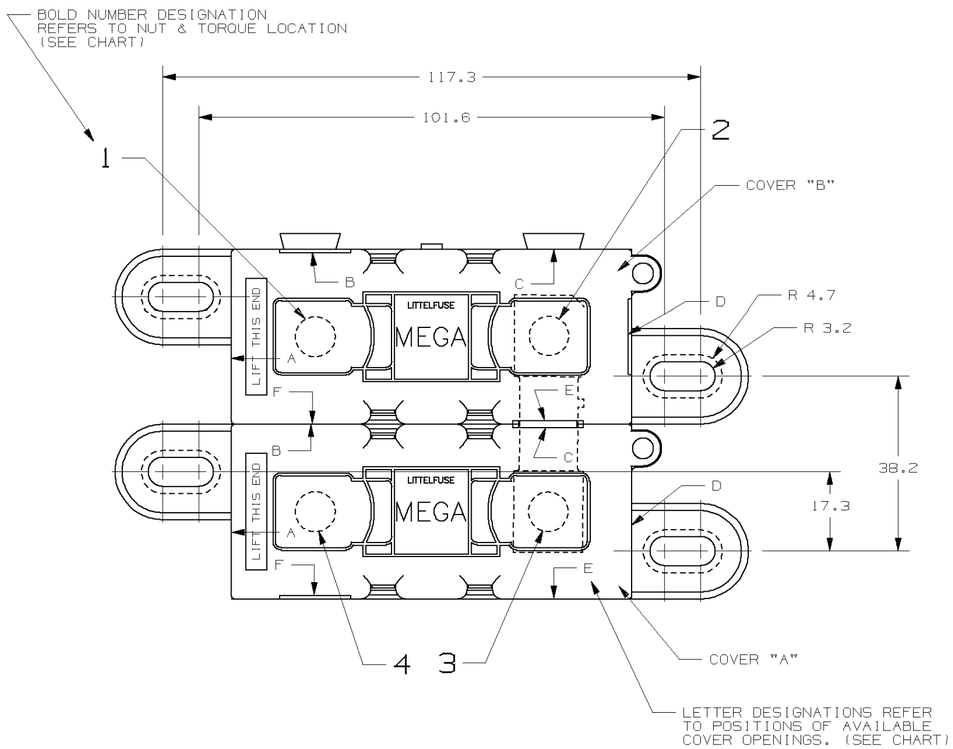

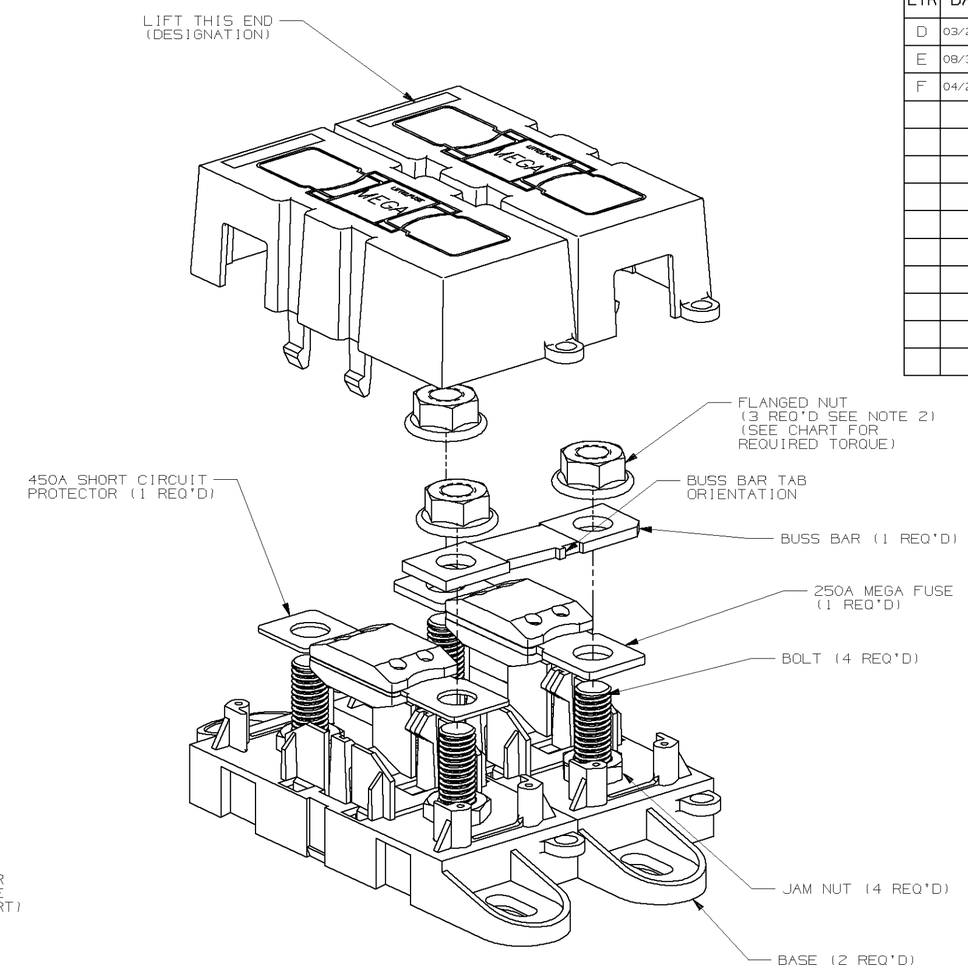

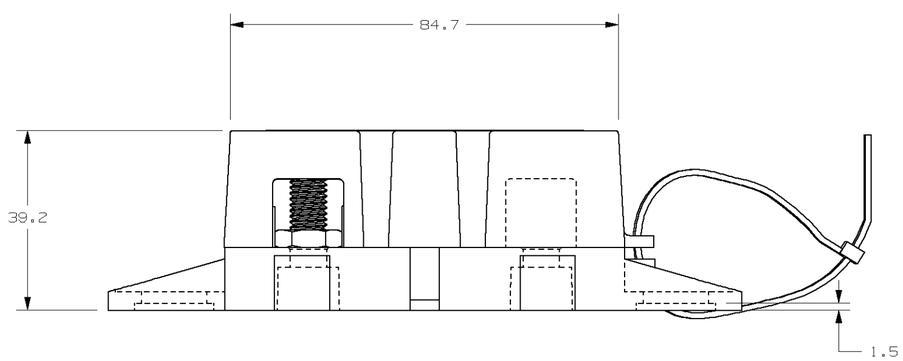

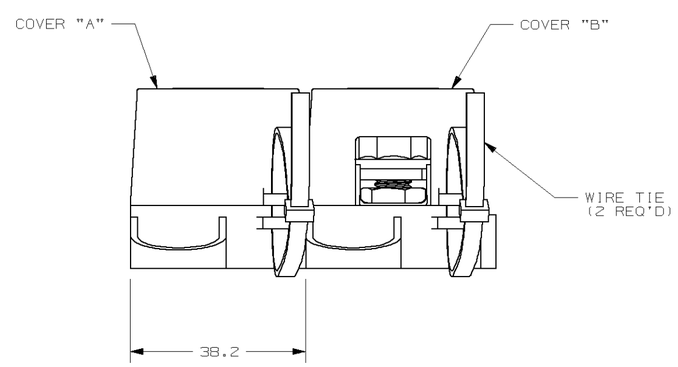

GENERAL NOTES:

1. COVER RETENTION TEST: MINIMUM FORCE OF 2 LBS. IS REQUIRED TO REMOVE COVER WHEN IT IS SUSPENDED UPSIDE DOWN. FORCE SHALL BE APPLIED THROUGH THE INNER HOLES (2) IN BASE. USE FIXTURE #T-C403 TO SUPPORT PART.

2. FLANGED NUT TO MEET THE FOLLOWING CRITERIA:
   FORD PART NO. W520413
   FINISH: S437.

3. TORQUE APPLIED AS INDICATED IN THE CHART
   TORQUE REQUIREMENTS FOR THE HEX NUT USED TO SECURE THE BUSSBAR OR THE CUSTOMER RING TERMINAL TO THE MEGA FUSE TO BE:
   8mm NUT - 12-18 NEWTON METERS [106-159 IN-LBS]

4. L/F VALIDATION TEST SPEC. VS-005005.

5. MANUALLY ASSEMBLE FLANGED NUT ONTO STUD AND FINGER TIGHTEN ANYWHERE BELOW TOP OF STUD, FOR ALL "NO TORQUE" LOCATIONS

6. MATERIALS:
   * BODY - GLASS FILLED THERMOPLASTIC
     COLOR - BLACK
   * COVER - THERMOPLASTIC
     COLOR - BLACK
   * WIRE TIE - THERMOPLASTIC
     COLOR - BLACK
   * STUDS & NUTS - M8 X 1.25 STEEL
     ZINC PLATE WITH TRIVALENT CHROMATE, LEACHED AND SEALED, INTEGRAL TORQUE CONTROL LUBRICANT FINISH
     (MEETS 96 HR. ASTM STD. B-117 SALT SPRAY REQ.)

METRIC

NO	COMPONENT NO	DESCRIPTION	QTY/M	U/M
-				
-				
-				

BILL OF MATERIAL

UNLESS OTHERWISE SPECIFIED, DIMENSIONS ARE IN MILLIMETERS. DIMENSIONS IN BRACKETS [ ] ARE INCHES

UNLESS OTHERWISE SPECIFIED, DIMENSIONS DO NOT INCLUDE PLATING.

◎	DENOTES CRITICAL CHARACTERISTICS.
CPK	DENOTES CPK DIMENSIONS, -MINIMUM CPK VALUE
⟨ST⟩	DENOTES A CHARACTERISTIC THAT PROVIDES AN INDICATION OF PROCESS PERFORMANCE. PROCEDURE FOR MEASUREMENT AND TRACKING TO BE DEFINED IN LITTELFUSE INSPECTION INSTRUCTIONS
CP	DENOTES CP DIMENSIONS, -MINIMUM CP VALUE MUST BE WITHIN THE DIMENSIONAL LIMITATIONS SHOWN ON DRAWING AND INITIALLY LOCATED TO ALLOW FOR MAXIMUM TOOL LIFE

COPIES TO: 1 9 18 / 2 10 19 / 3 12 20 / 4 13 21 / 5 14 23 / 6 15 33 / 7 16 43 / 8 17 53

MATL SPEC

FINISH

DRW GLAB	DATE 05/25/05	SCALE 1:1
CHK	DATE	SUPER DR
APPD	DATE	FINSH GOOD WT GRAMS/PIECE

TOLERANCE UNLESS OTHERWISE SPECIFIED
ONE PLACE DEC +/-.3 THREE PLACE DEC +/-.100
TWO PLACE DEC +/-.25 ANGULAR +/-1°

3RD ANGLE PROJECTION

TITLE DUAL MEGAFUSE HOLDER FOR 450A & 250A

Littelfuse® DES PLAINES, ILLINOIS 60016

REVISION F | DRWG. NO. 02982006ZXT | OUTLINE

CAD GENERATED DRAWING - NO PENCIL CHANGES ALLOWED