THIS DRAWING AND THE INFORMATION CONTAINED WITHIN IT ARE CONFIDENTIAL AND MAY NOT BE COPIED OR DISCLOSED WITHOUT THE WRITTEN PERMISSION OF LITTELFUSE.

CABLE SIZE mm2	FEMALE TERMINAL (DELPHI 280 SEALED)	CABLE DIA.	CABLE SEAL (DELPHI 280 METRI - PACK REEL/LOOSE)	COLOR
0.35 - 0.5	12084201	1.84 - 2.51	12034365 / 15324983	DARK RED
0.5 - 0.8 - 1.0	12077411	2.03-3.12	12089444 / 15324985	PURPLE
1.0 - 2.0	15363933	2.03 - 2.85	12015284 / 15324982	GREEN
2.0 - 3.0	12129493	2.45 - 3.80	12015359 / 15324980	GRAY
3	12077413	3.49 - 3.65	12015360 / 15324981	BLUE
		CAVITY PLUG	12010300	GREEN

FEMALE TERMINAL FOR MINI FUSE

REVISIONS				
ZONE	REV.	DESCRIPTION	DATE	APPROVED
	A	ECR 520244 - DRAWING CREATION. E. FLORES	10/05/2022	S. CASTILLO

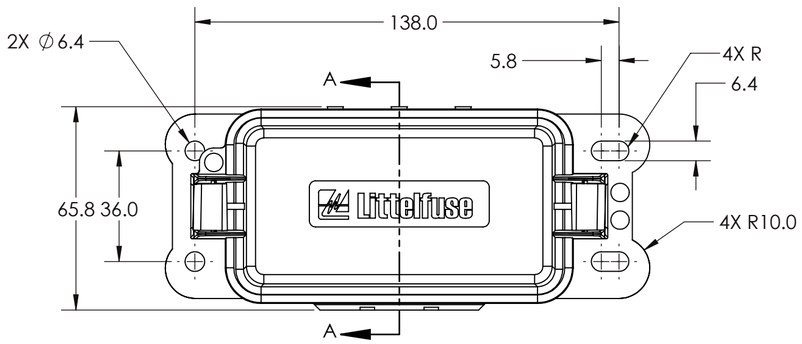

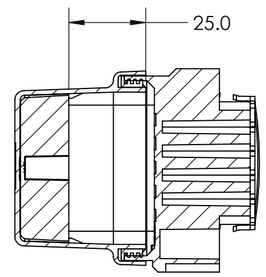

SECTION A-A
SCALE 2 : 3

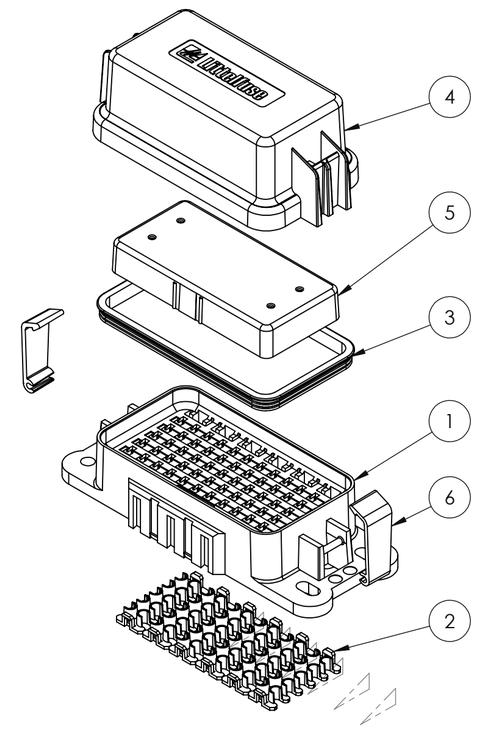

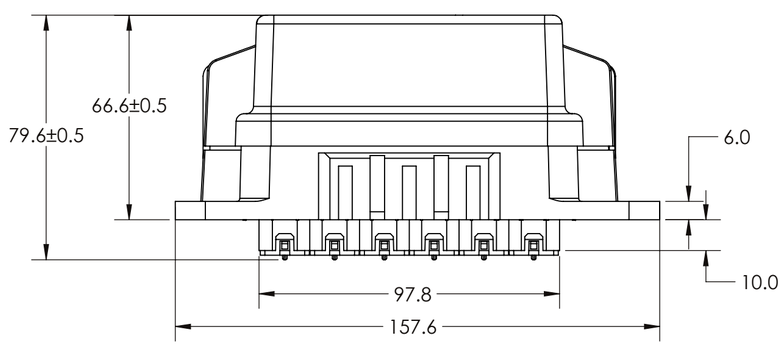

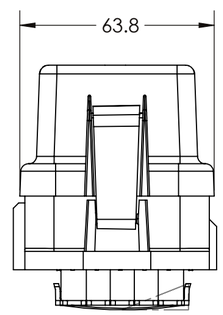

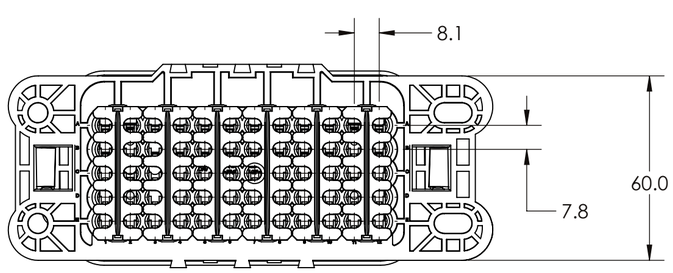

1.- MATERIAL:
BASE AND COVER: NYLON (BLACK).
TPA: PA (BLUE).
SEAL: SILICON RUBBER (GREEN).

2.- INSTALLATION TORQUE:
(ON FLAT SURFACE) 4-6 Nm USING M6 BOLT AND LOCK WASHER.

3.- FUSE RATING 30A PER CIRCUIT.

4.- TERMINAL RETENTION MUST MEET REQUIREMENTS OF USCAR 2 SECTION 5.4.1.3 USING DELPHI METRI-PACK TERMINALS (SEALED/TANGLESS):
4.1.- TERMINAL INSERTION FORCE: 30N MAX (15N MAX. FOR WIRE SIZE </=1mm^2).
4.2.- TERMINAL EXTRACTION FORCE: 60N MIN.
4.3.- TERMINAL EXTRACTION FORCE WITH TPAINSTALLESD: 90N MIN.

5.- TPA RETENTION MUST MEET EQUIREMENTS OF USCAR 2 SECTION 5.4.5.4:
INSERTION FORCE: 10-30N.
EXTRACTION FORCE: 18-60N.

6.- 60 TERMINAL OPENINGS.

7.- PACKAGING:
6.1.- PARTS ARE SHIPPED WITH TPA'S AS BULK AND THE BASE WITH COVER, SEAL AND GRID INSTALLED. GRID MUST BE FIXED INTO BOTTOM OF COVER.
6.2.- RANDOM SAMPLES MUST BE INTERLOCKED WITH TWO OTHER BASE PARTS TO VERIFY STACKABILITY.
6.3.- ONE BOX CONTAINS:
6.3.1.- BAG OF 50 ASSEMBLED BASES, COVERS, SEALS AND GRINDS AND 300 TPA'S.
6.3.2.- TOTAL NUMBER OF ASSEMBLIES PER BOX IS 50.

NO.	COMPONENT NO	DESCRIPTION	QTY./M	U/M
6	883-029	CLIP-ZFB	2	EA
5	901-322	GRID	1	EA
4	873-018	COVER	1	EA
3	901-323	SEAL	1	EA
2	883-083	TPA	6	EA
1	868-055	BASE	1	EA

DIMENSIONS ARE SHOWN IN MILLIMETERS. DIMENSIONS AND TOLERANCES ARE DEFINED ACCORDING TO ANSI/ASME Y14.5-1994.

PER CHI-NPD20-0008 PROCEDURE

●	FIT/ FUNCTION CRITICAL CHARACTERISTICS
<S>	SAFETY/ COMPLIANCE CRITICAL CHARACTERISTICS SYMBOL
CPK	DENOTES CPK DIMENSIONS MINIMUM CPK VALUE
⟨ST⟩	DENOTES A CHARACTERISTIC THAT PROVIDES AN INDICATION OF PROCESS PERFORMANCE PROCEDURE FOR MEASUREMENTAND TRACKINGTO BE DEFINED IN LITTELFUSE INSPECTION INSTRUCTIONS
CP	DENOTES CP DIMENSIONS, -MINIMUM CP VALUE MUST BE WITHIN THE DIMENSIONAL LIMITATIONS SHOWN ON DRAWING AND INITIALLY LOCATED TO ALLOW FOR MAXIMUM TOOL LIFE

	NAME	DATE
DRAWN	E. FLORES	05/30/2022
CHECKED	S. CASTILLO	09/12/2022
	-	-
	-	-

FORM NO: CVP-PE40-0005 REV B

THIRD ANGLE PROJECTION

DO NOT SCALE DRAWING

Littelfuse
Expertise Applied | Answers Delivered

TITLE HWB60AL FUSE HOLDER W GRID

SIZE C | DWG. NO. OUTLINE | OL-PDM71004ZXM | REV. A

SCALE 1:5 | SHEET 1 OF 1