COVER PART	COVER OPENING POSITION
A	C F
B	A C D E
C	B E

LTR	DATE	REVISION	CHK	APD
A	07/18/06	61864 - RELEASED DJG		
B	04/10/07	85414D-REDRAWN IN UG GMB		
C	08/31/07	000170EC/C - REMOVE USA FROM COVER BRK		
D	04/24/08	000463EC/D-CHG. NOTE 2 GMB		

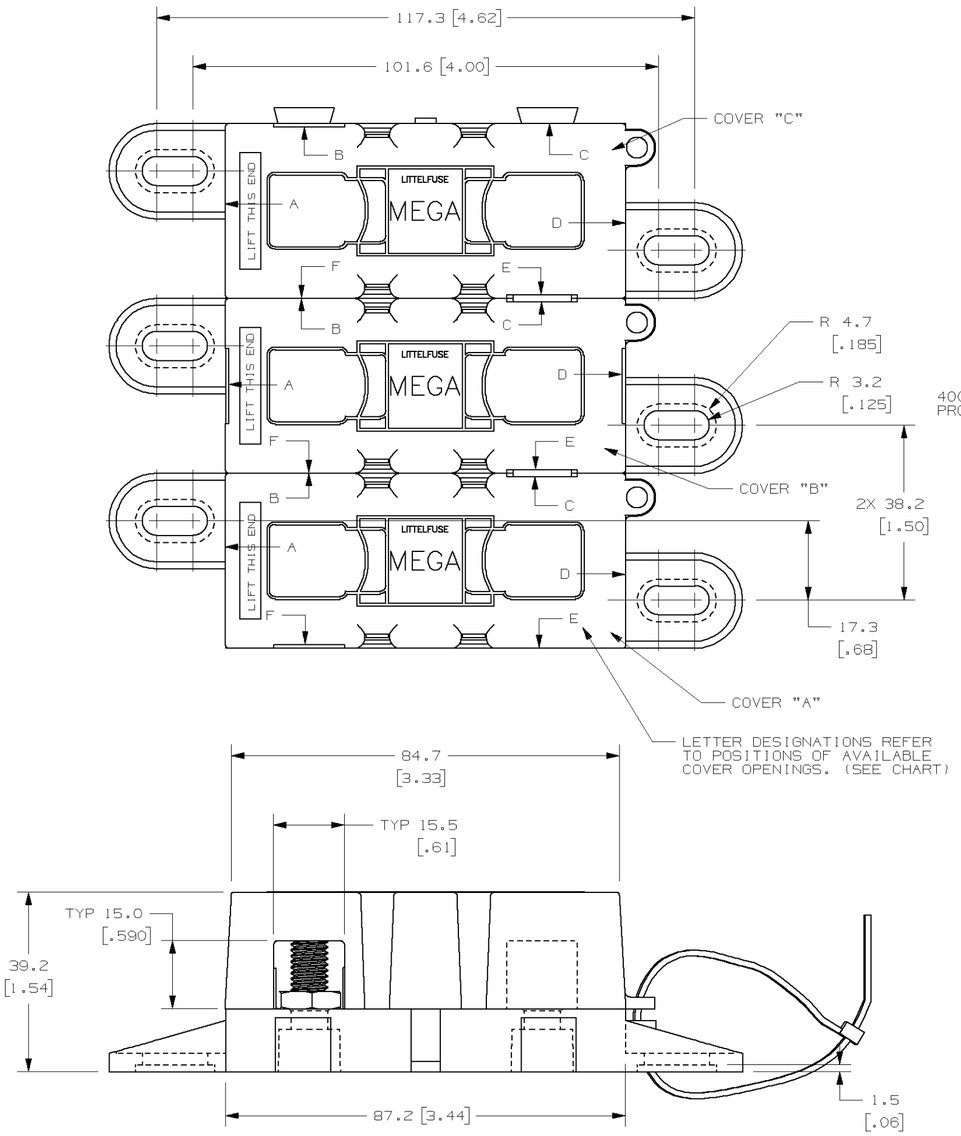

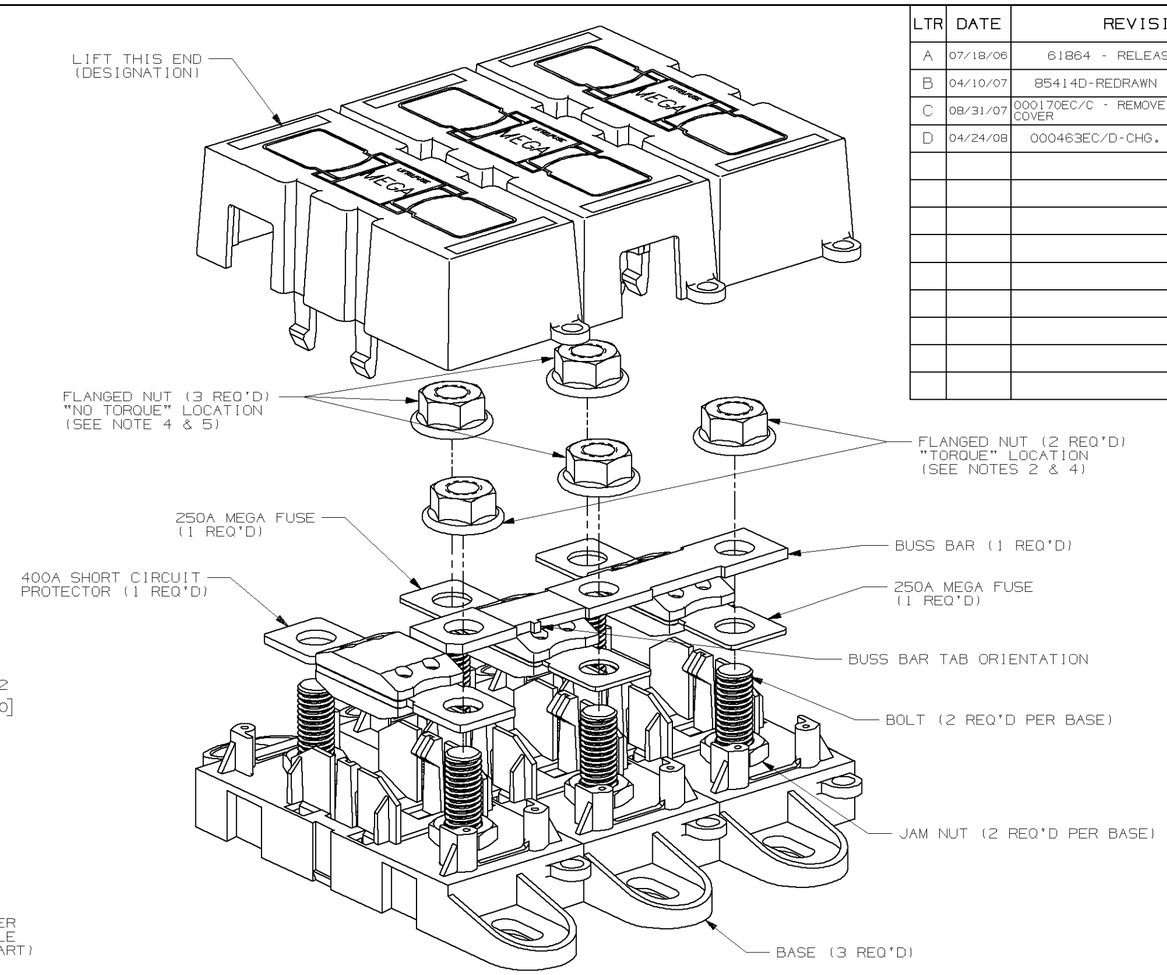

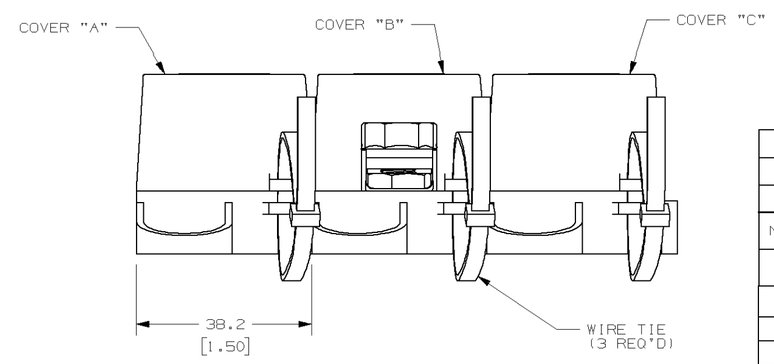

GENERAL NOTES:

1. COVER RETENTION TEST: MINIMUM FORCE OF 2 LBS. IS REQUIRED TO REMOVE COVER WHEN IT IS SUSPENDED UPSIDE DOWN. FORCE SHALL BE APPLIED THROUGH THE INNER HOLES (2) IN BASE. USE FIXTURE #T-C403 TO SUPPORT PART.
2. TORQUE APPLIED TO ALL "TORQUE" LOCATIONS TORQUE REQUIREMENTS FOR THE HEX NUT USED TO SECURE THE BUSSBAR OR THE CUSTOMER RING TERMINAL TO THE MEGA FUSE TO BE: 8mm NUT - 12-18 NEWTON METERS [106-159 IN-LBS]
3. HOLDER MEETS L/F VALIDATION TEST SPEC. VS-005005.
4. FLANGED NUT TO MEET THE FOLLOWING CRITERIA: FORD PART NO. W520413 FINISH: S437.
5. MANUALLY ASSEMBLE FLANGED NUT ONTO STUD AND FINGER TIGHTEN ANYWHERE BELOW TOP OF STUD, FOR ALL "NO TORQUE" LOCATIONS.
6. MATERIALS:
   * BODY - GLASS FILLED THERMOPLASTIC COLOR - BLACK
   * COVER - THERMOPLASTIC COLOR - BLACK
   * WIRE TIE - THERMOPLASTIC COLOR - BLACK
   * STUDS & NUTS - M8 X 1.25 STEEL ZINC PLATED WITH TRIVALENT CHROMATE, LEACHED AND SEALED, INTEGRAL TORQUE CONTROL LUBRICANT FINISH, (MEETS 96 HR. ASTM STD. B-117 SALT SPRAY REQ.)

METRIC

NO	COMPONENT NO	DESCRIPTION	QTY/M	U/M
-				
-				
-				

BILL OF MATERIAL

UNLESS OTHERWISE SPECIFIED, DIMENSIONS ARE IN MILLIMETERS. DIMENSIONS IN BRACKETS [ ] ARE INCHES

UNLESS OTHERWISE SPECIFIED, DIMENSIONS DO NOT INCLUDE PLATING.

◎	DENOTES CRITICAL CHARACTERISTICS.
CPK	DENOTES CPK DIMENSIONS, -MINIMUM CPK VALUE
⟨ST⟩	DENOTES A CHARACTERISTIC THAT PROVIDES AN INDICATION OF PROCESS PERFORMANCE. PROCEDURE FOR MEASUREMENT AND TRACKING TO BE DEFINED IN LITTELFUSE INSPECTION INSTRUCTIONS
CP	DENOTES CP DIMENSIONS, -MINIMUM CP VALUE MUST BE WITHIN THE DIMENSIONAL LIMITATIONS SHOWN ON DRAWING AND INITIALLY LOCATED TO ALLOW FOR MAXIMUM TOOL LIFE

COPIES TO

1	9	18
2	10	19
3	12	20
4	13	21
5	14	23
6	15	33
7	16	43
8	17	53

MATL SPEC

FINISH

DRW DJG	DATE 02/03/06	SCALE 1:1
CHK	DATE	SUPER DR
APPD	DATE	FINSH GOOD WT GRAMS/PIECE

TOLERANCE UNLESS OTHERWISE SPECIFIED
ONE PLACE DEC +/-.3 THREE PLACE DEC +/-.100
TWO PLACE DEC +/-.25 ANGULAR +/-1°

3RD ANGLE PROJECTION

TITLE 3 POLE MEGA HOLDER FOR 400A & TWO 250A

Littelfuse® DES PLAINES, ILLINOIS 60016

REVISION	DRWG. NO.	OUTLINE
D	02983005ZXT	

CAD GENERATED DRAWING - NO PENCIL CHANGES ALLOWED