M8 X 1.25	354539		108 LB.-IN (12.0 N.m)
"A" TAP	LITTELFUSE Nº		RECOMENDED TORQUE

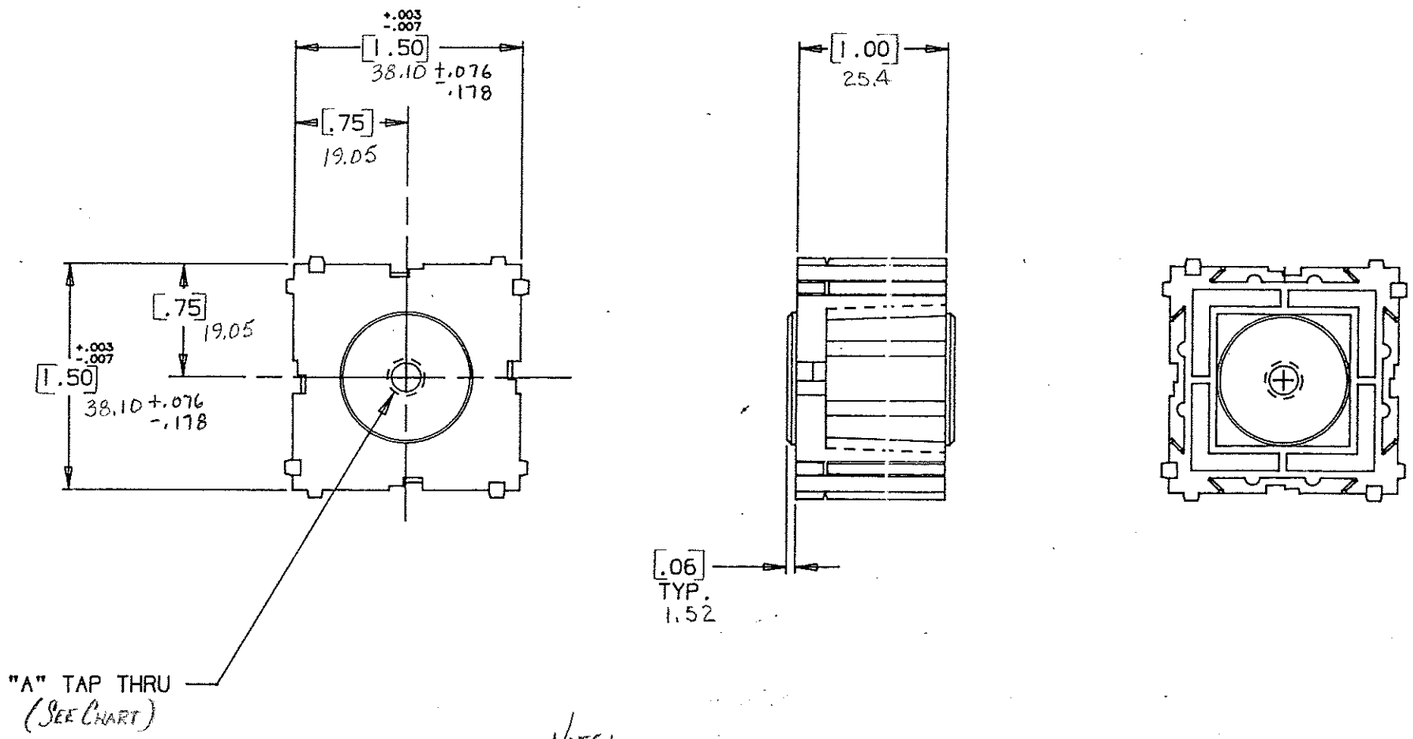

NOTE:

ALL DIMENSIONS ARE IN MILLIMETERS.
ENGLISH DIMENSIONS IN [ ].

CERTIFICATION OF COUNTRY OF ORIGIN REQUIRED

MAT'L. SPEC. NYLON COLOR: BLACK
FINISH
SCALE ~
DR. CES. Oct 25 94
CHK.
SUPER. DR.
APPD. N. Hedley
DATE 10-26-94
RAW STK. WT. LBS./M

TOLERANCE UNLESS OTHERWISE SPECIFIED
TWO PLACE DEC. ± .50mm [.020] FRACTION ±
THREE PLACE DEC. ± .125mm [.010] ANGULAR ±

COPIES TO
1 2 3 4 5 6 7 8 9 10 12 13 14 15 16 17 18 19 20 21 23 33 43 53

TITLE POWER TAP MODULE

Littelfuse
800 E. NORTHWEST HIGHWAY
DES PLAINES, ILLINOIS 60016

DRWG. NO. D- 03540539Z

LTR	REVISION	CHK.	APD.
A	08559 - RELEASED OCTOBER 25, 94 CES.	CES	AH
B	369886 - ADD METRIC DIM. 7-19-95 RFR	CS	CK
C	371055D. CHANGE TITLE 8-19-96 JCU	TRK	RB
D	000807ER - RE-INSTATE 10/09/09 J.U.		

DRAWING NO.