THIS DRAWING AND THE INFORMATION CONTAINED WITHIN IT ARE CONFIDENTIAL AND MAY NOT BE COPIED OR DISCLOSED WITHOUT THE WRITTEN PERMISSION OF LITTELFUSE.

| PART NUMBER | DESCRIPTION | COLOR | FIGURE |
|---|---|---|---|
| 923-025-001 | 3/8" STUD CAP | RED | 2 |
| 923-025-002 | 3/8" STUD CAP | BLACK | 2 |
| 923-025-003 | M8 STUD CAP | RED | 1 |
| 923-025-004 | M8 STUD CAP | BLACK | 1 |

REVISIONS

| ZONE | REV. | DESCRIPTION | DATE | APPROVED |
|---|---|---|---|---|
| | A | PCO #5300217. INITIAL RELEASE. DSILVA. | 2/23/2023 | S. CASTILLO |

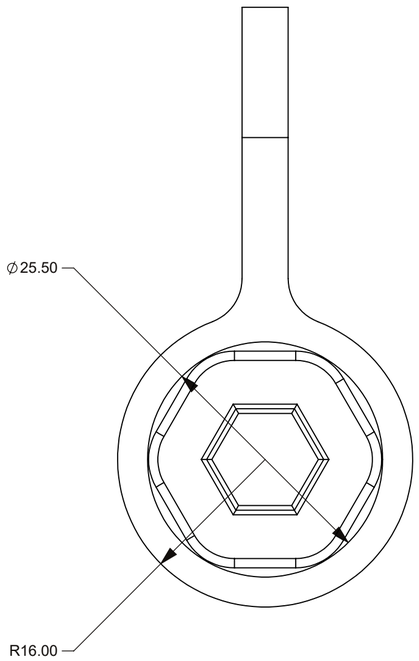


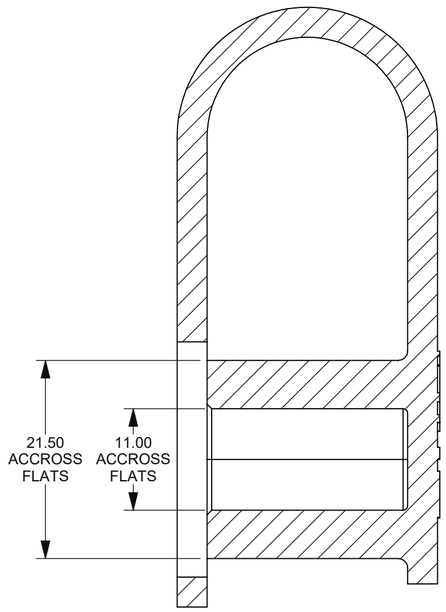


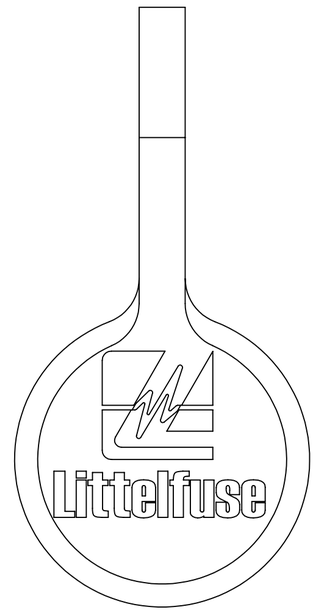


FIGURE 1. M8 STUD CAP

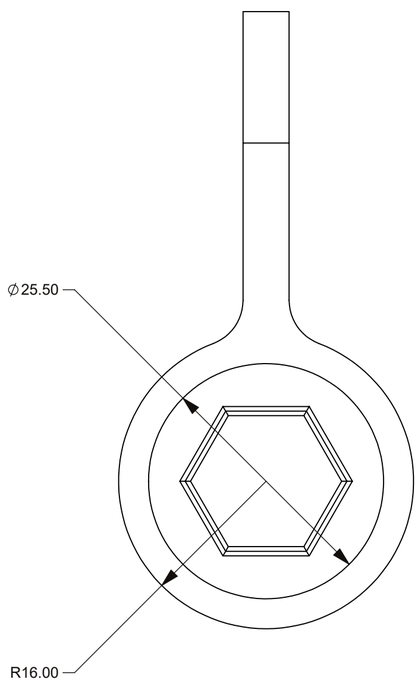


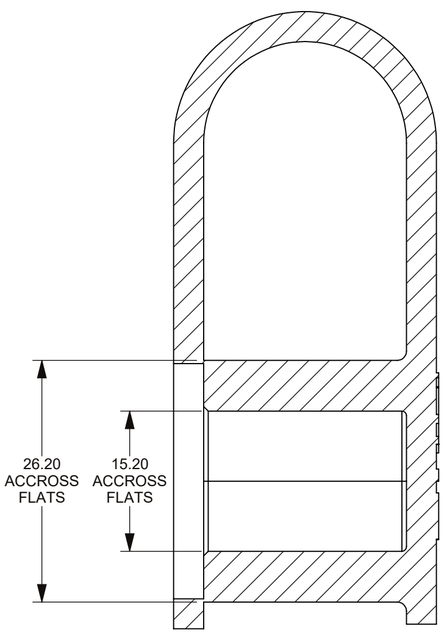


FIGURE 2. 3/8" STUD CAP

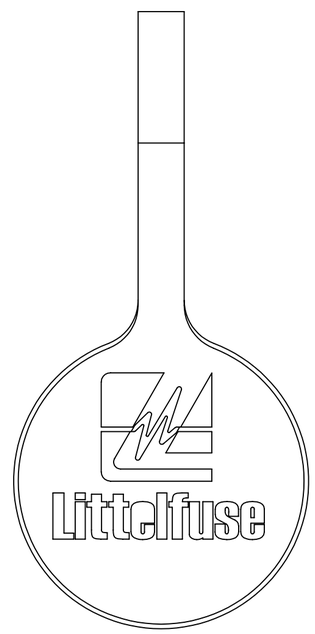


NOTES:
1. MATERIAL: SILICONE

| NO. | COMPONENT NO. | COMPONENT NAME | QTY | U |
|---|---|---|---|---|

TOLERANCES UNLESS OTHERWISE SPECIFIED (REF. ISO 2768-fH)

| .5 to 3 | >3 to 6 | >6 to 30 | >30 to 120 | >120 to 400 | | | | | | | | ANGLE |
|---|---|---|---|---|---|---|---|---|---|---|---|---|
| ±0.05 | ±0.05 | ±0.10 | ±0.15 | ±0.20 | | | | | | | | NONE |

DIMENSIONS ARE SHOWN IN MILLIMETERS. DIMENSIONS AND TOLERANCES ARE DEFINED ACCORDING TO ANSI/ASME Y14.5-1994.

PER CHI-NPD20-0008 PROCEDURE

| | |
|---|---|
| ● | FIT/ FUNCTION CRITICAL CHARACTERISTICS |
| <S> | SAFETY/ COMPLIANCE CRITICAL CHARACTERISTICS SYMBOL |
| CPK | DENOTES CPK DIMENSIONS MINIMUM CPK VALUE |
| ⟨ST⟩ | DENOTES A CHARACTERISTIC THAT PROVIDES AN INDICATION OF PROCESS PERFORMANCE.PROCEDURE FOR MEASUREMENTAND TRACKINGTO BE DEFINED IN LITTELFUSE INSPECTION INSTRUCTIONS |
| CP | DENOTES CP DIMENSIONS. -MINIMUM CP VALUE MUST BE WITHIN THE DIMENSIONAL LIMITATIONS SHOWN ON DRAWING AND INITIALLY LOCATED TO ALLOW FOR MAXIMUM TOOL LIFE |

| | NAME | DATE |
|---|---|---|
| DRAWN | DSILVA | 2/7/2023 |
| CHECKED | S.CASTILLO | 2/23/2023 |
| | - | - |
| | - | - |

FORM NO: CVP-PE40-0005 REV B

THIRD ANGLE PROJECTION

DO NOT SCALE DRAWING

Littelfuse®
Expertise Applied | Answers Delivered

TITLE
STUD CAPS

| SIZE | DWG. NO. | | REV. |
|---|---|---|---|
| C | OUTLINE | OL-923-025-000 | A |

SCALE 2:1 SHEET 1 OF 1