MM	IN
.25	.010
12.70	.500
13.71	.540
17.27	.680
21.08	.830
24.38	.960
30.22	1.190
31.49	1.240
36.83	1.450
40.68	1.601
43.18	1.700

57013-08

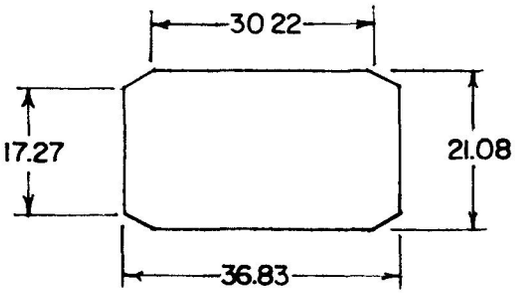

MOUNTING HOLE DETAIL

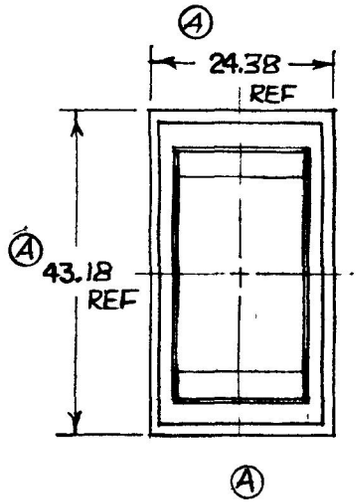

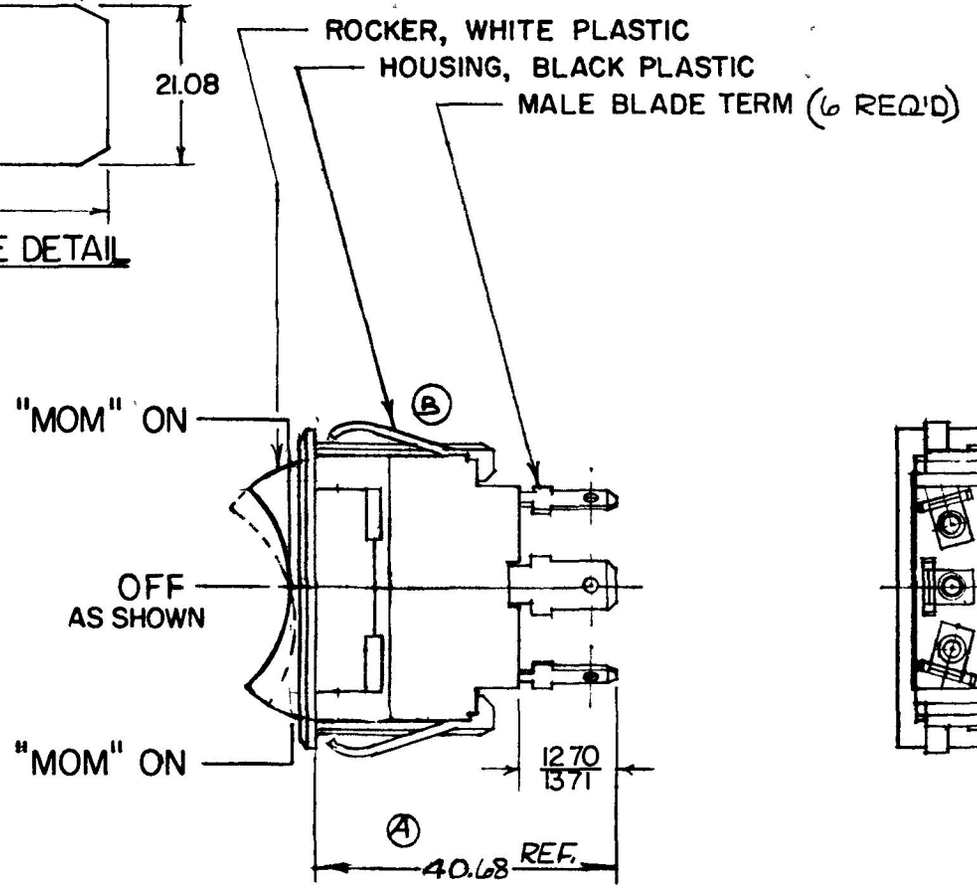

NOTE
1. WEATHERPROOF
2. SILVER CONTACTS
3. HEAVY DUTY
4. 25 AMPS @ 12 VDC LAMP LOAD

METRIC

DO NOT SCALE

LET	WAS	DATE	BY	LET	WAS	DATE	BY
				B	ECN 23335	12-11-86	20
				A	REV. 21346	3-20-81	RJ
					ISSUED	10-7-80	RJP

MATERIAL	DRAWN	CHECKED	APPRV D	SCALE		DATE DRAWN
NOTED	RMT	8-22-80		1:1	57013-01, EXCEPT WEATHERPROOF CONSTRUCTION	7-24-80
FINISH	Cole Hersee Co. 20 OLD COLONY AVENUE SOUTH BOSTON MA. U.S.A. 02127					DATE BLUEPRINT
TOLERANCES DECIMAL ± METRIC ±.25	DPDT ("MOM"ON-OFF-"MOM"ON) ROCKER SWITCH					57013-08

CH-188(4-78)

Confidential Property of Cole Hersee