CAD GENERATED DRAWING - NO PENCIL CHANGES ALLOWED

PART NUMBER	① COVER	② FUSE HOLDER	③ TERMINAL	④ CABLE SEAL	WIRE SIZE (mm^2)
01520003TXN941	01520903_	01520003_	09130727TXN	08680905TXN	2.5 - 6
01520003TXN942	01520903_	01520003_	09130728TXN	08680906TXN	6 - 10

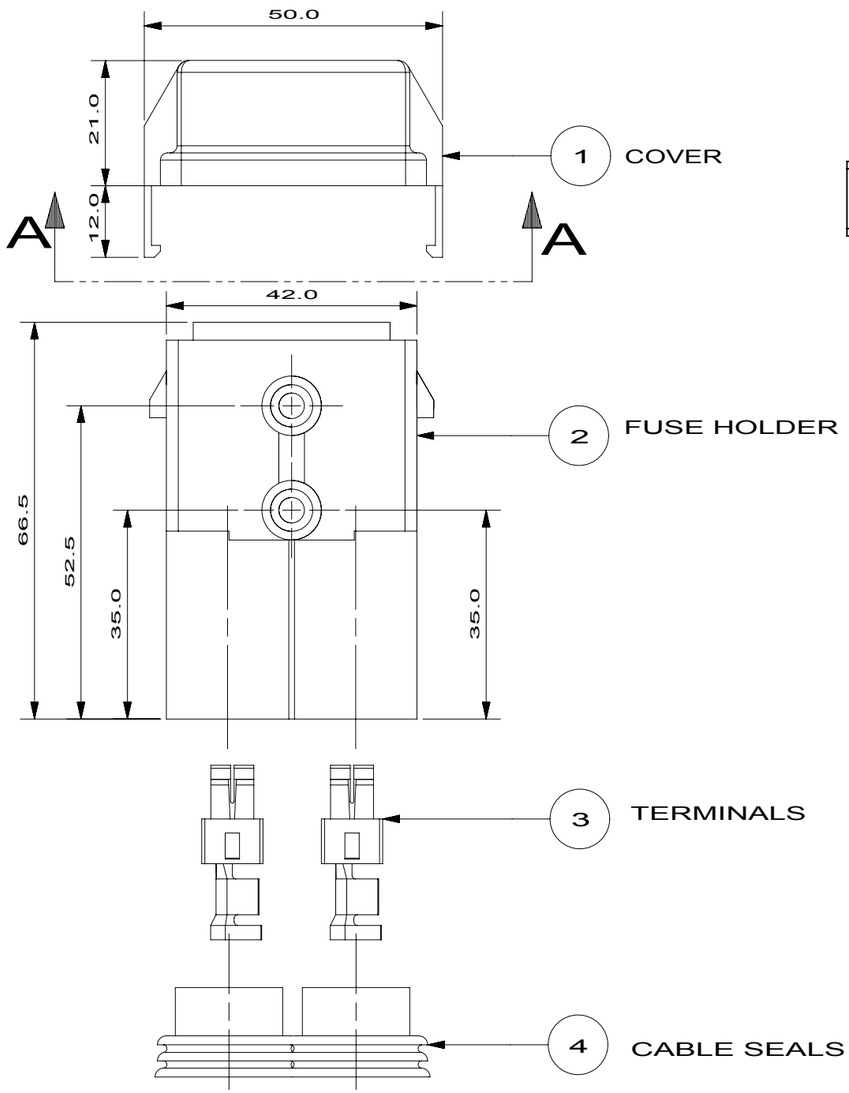

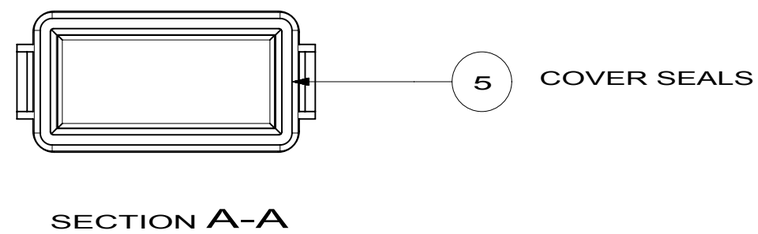

METRIC

COMPONENT

NO	COMPONENT NO	DESCRIPTION	QTY/M	U/M

BILL OF MATERIAL

UNLESS OTHERWISE SPECIFIED, DIMENSIONS ARE IN MILLIMETERS. DIMENSIONS IN BRACKETS [ ] ARE INCHES

UNLESS OTHERWISE SPECIFIED, DIMENSIONS DO NOT INCLUDE PLATING.

◎ DENOTES CRITICAL CHARACTERISTICS.

CPK DENOTES CPK DIMENSIONS. -MINIMUM CPK VALUE

ST DENOTES A CHARACTERISTIC THAT PROVIDES AN INDICATION OF PROCESS PERFORMANCE. PROCEDURE FOR MEASUREMENT AND TRACKING TO BE DEFINED IN LITTELFUSE INSPECTION INSTRUCTIONS

CP DENOTES CP DIMENSIONS. -MINIMUM CP VALUE MUST BE WITHIN THE DIMENSIONAL LIMITATIONS SHOWN ON DRAWING AND INITIALLY LOCATED TO ALLOW FOR MAXIMUM TOOL LIFE

MATL SPEC

FINISH

COPIES TO: 1 9 18 / 2 10 19 / 3 12 20 / 4 13 21 / 5 14 23 / 6 15 33 / 7 16 43 / 8 17 53

DRW	RLDJ	DATE 07/04/11
CHK		DATE
APPD		DATE

SCALE 1:1

SUPER DR

FINSH GOOD WT GRAMS/PIECE

TOLERANCES UNLESS OTHERWISE SPECIFIED (REF. ISO 2768-fH)

DIMENSION	UP TO 3	OVER 3 UP TO 6	OVER 6 UP TO 30	OVER 30 UP TO 120	OVER 120 UP TO 400
TOLERANCE	±0.05	±0.05	±0.1	±0.15	±0.2

3RD ANGLE PROJECTION

TITLE MAXI FUSE HOLDER

Littelfuse LIPA CITY, BATANGAS, PHILIPPINES

REVISION A

DRWG. NO. OL-01520003TXN

LTR	DATE	REVISION	CHK	APD
A	7/5/11	502840ERA- REDRAWN BASED ON AVAILABLE 3D MODEL. OTHER INFORMATION BASED FROM THE CATALOG OF 01520003TXN941 AND 01520003TXN942 RLDJ		