Revision Control Record			
Rev.	Description of Change	ECN No.	Date
B	NOTES & VIEW	03189	5/30/03
C	DIMENSIONS & VIEW	03733	12/23/03

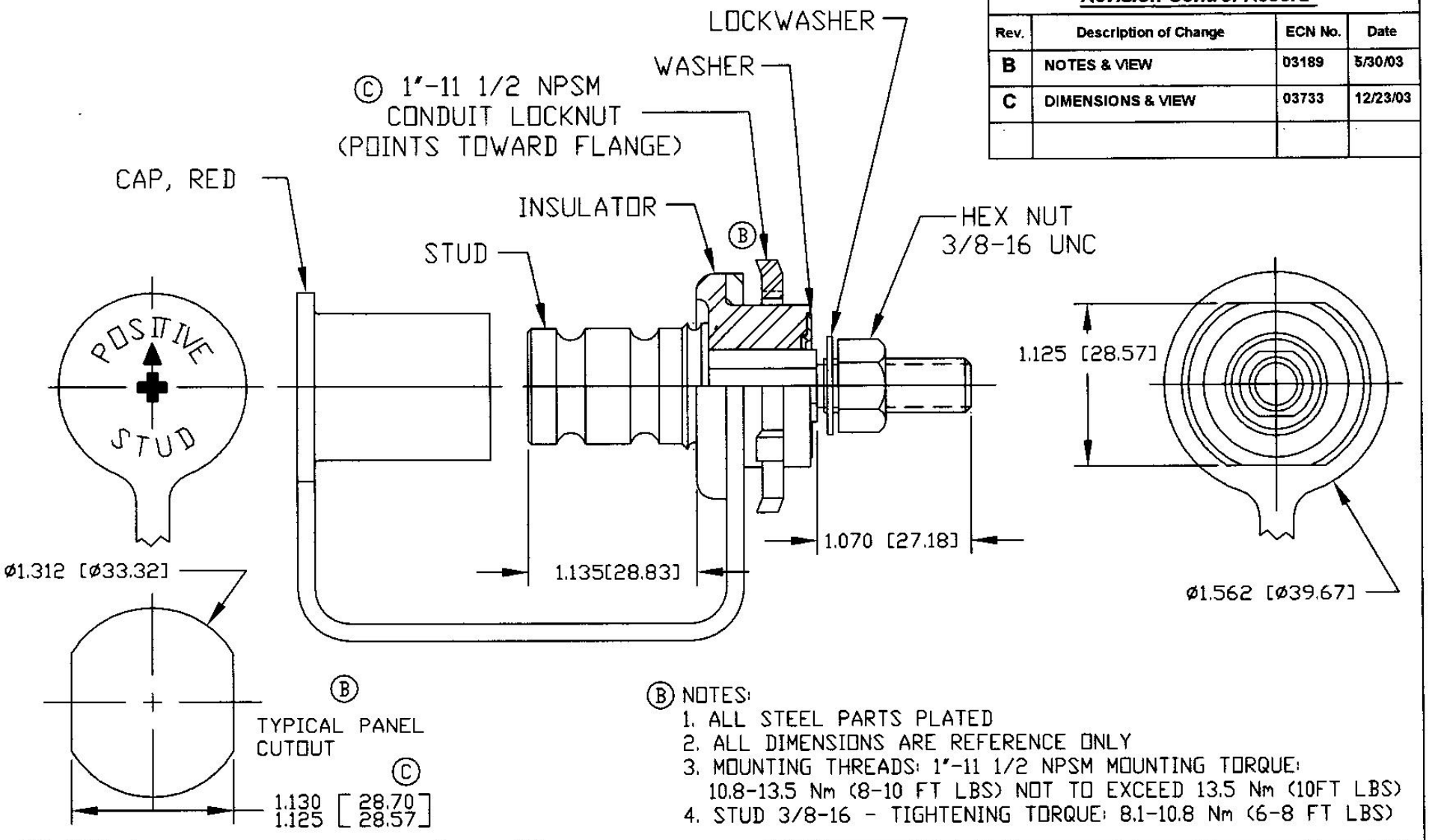

Ⓑ NOTES:
1. ALL STEEL PARTS PLATED
2. ALL DIMENSIONS ARE REFERENCE ONLY
3. MOUNTING THREADS: 1"-11 1/2 NPSM MOUNTING TORQUE: 10.8-13.5 Nm (8-10 FT LBS) NOT TO EXCEED 13.5 Nm (10FT LBS)
4. STUD 3/8-16 - TIGHTENING TORQUE: 8.1-10.8 Nm (6-8 FT LBS)

Tolerances Unless otherwise specifically noted, the following are default tolerances;
* 2-place Decimal Dimensions +/-.02"
* 3-place Decimal Dimensions +/-.005"
* Angular Dimensions +/-1.0 Deg.
* Metric: Refer to equivalent English Dimension Tolerance
>>> NOTE: *All tolerances are Non-Cumulative.* <<<

Dimensional Units All dimensions are expressed in inches except those shown in brackets (xxx) are expressed in millimetre

"REF." or an Asterisk (*) = Non-Toleranced Reference Dimension, shown for clarification purposes only.

PROPRIETARY INFORMATION This Engineering Drawing, and the information contained herein, is proprietary to Cole Hersee Company and may not be disclosed, re-produced, or in any other way transferred or communicated to any other party without the express written consent of an authorized representative of Cole Hersee Company.

DESIGN CONTROL It is the responsibility of the individual using / referencing this drawing to assure that the noted design revision level agrees with the revision level of the Controlled Document (Master Drawing). This is a NON-CONTROLLED DOCUMENT unless otherwise specifically noted.

DO NOT SCALE - Dimensional variation may occur during printing / reproduction.

Special Characteristics:

- (CC) Critical Characteristic, relating to Safety and/or Regulatory Compliance
- (X) Significant Characteristic relating to Process Control (SPC)
- (KC) Key Characteristic relating to Form - Fit - Function as defined by Cole Hersee Company and/or the Customer

(Note that the identification of any Characteristics as being "Special" does not alter the requirement that ALL specified dimensions & tolerances must be met.)

Cole Hersee Co.
20 Old Colony Ave., South Boston, MA, 02127
Phn: 617-268-2100 Web: www.colehersee.com

Description: **JUMPER STUD, POS.**

Drawing / Part No.: **46210-05**

Current Rev.: **C**

Used On or Ref.:	Scale:	Drawn By:	Date Drawn:	Responsible Engineer:	
EX22639	1:1	JP	6/8/87	SAM	Pg. 1 of 1