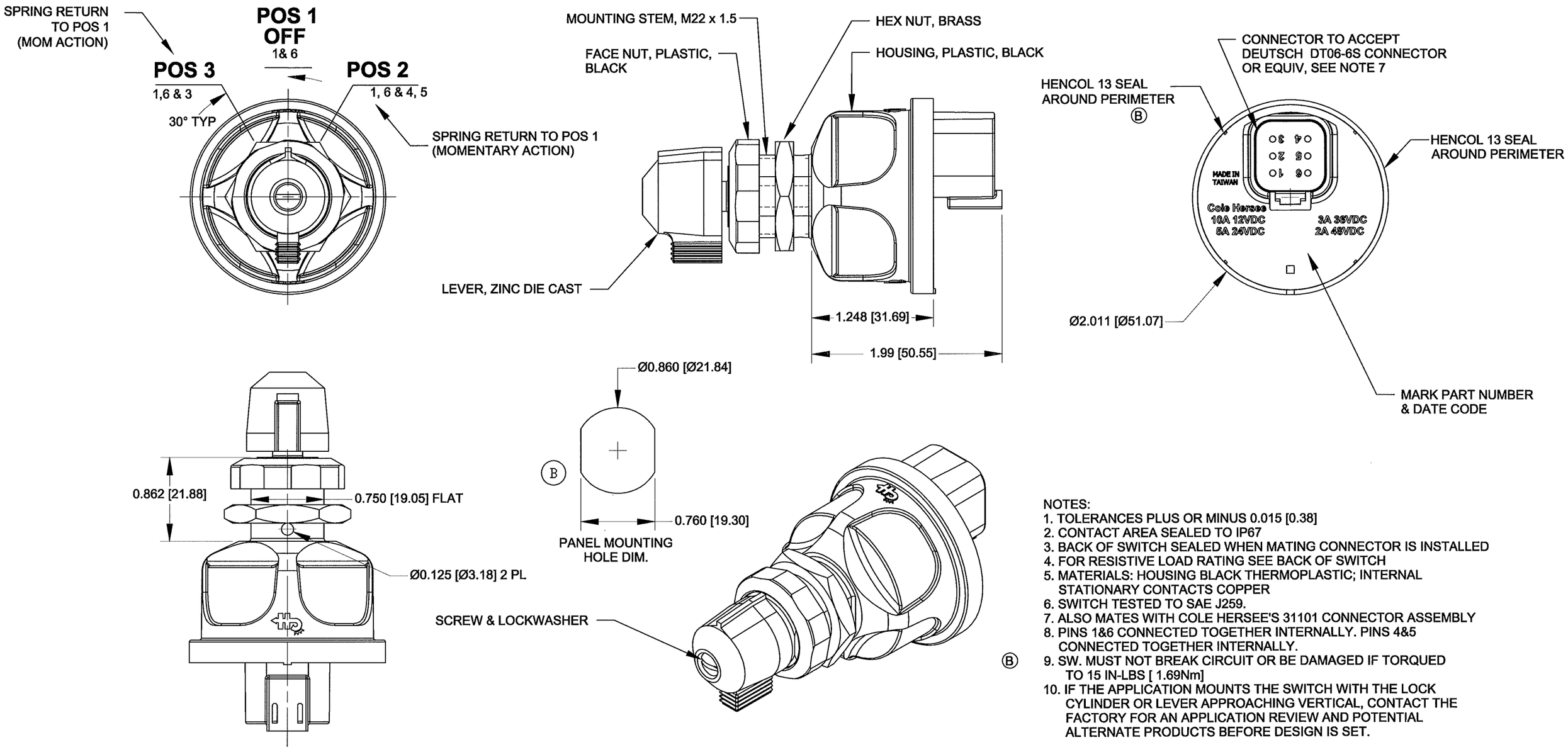

NOTES:
1. TOLERANCES PLUS OR MINUS 0.015 [0.38]
2. CONTACT AREA SEALED TO IP67
3. BACK OF SWITCH SEALED WHEN MATING CONNECTOR IS INSTALLED
4. FOR RESISTIVE LOAD RATING SEE BACK OF SWITCH
5. MATERIALS: HOUSING BLACK THERMOPLASTIC; INTERNAL STATIONARY CONTACTS COPPER
6. SWITCH TESTED TO SAE J259.
7. ALSO MATES WITH COLE HERSEE'S 31101 CONNECTOR ASSEMBLY
8. PINS 1&6 CONNECTED TOGETHER INTERNALLY. PINS 4&5 CONNECTED TOGETHER INTERNALLY.
9. SW. MUST NOT BREAK CIRCUIT OR BE DAMAGED IF TORQUED TO 15 IN-LBS [1.69Nm]
10. IF THE APPLICATION MOUNTS THE SWITCH WITH THE LOCK CYLINDER OR LEVER APPROACHING VERTICAL, CONTACT THE FACTORY FOR AN APPLICATION REVIEW AND POTENTIAL ALTERNATE PRODUCTS BEFORE DESIGN IS SET.

Revision Control Record

Rev.	Description of Change	ECN No.	Date
A	RELEASE PART	12327	10/18/12
B	ADDED HENCOL 13; ADDED TORQUE NOTE	13181	06/28/13

Rev.	Description of Change	ECN No.	Date

Tolerances Unless otherwise specifically noted, the following are default tolerances;

2-places	3-places	Angular
+/- 0.02"	+/- 0.005"	+/- 1°

Metric: Shown in [ ] refers to equivalent English Dim Tol

"REF." or an Asterisk (*) = Non-Toleranced Reference Dimension, shown for clarification purposes only.

NOTE: *All tolerances are Non-Cumulative.*

PROPRIETARY INFORMATION
This Engineering Drawing, and the information contained herein, is proprietary to Cole Hersee Company and may not be disclosed, re-produced, or in any other way transferred or communicated to any other party without the express written consent of an authorized representative of Cole Hersee Company.

Special Characteristics:
- CC Critical Characteristic, relating to Safety and/or Regulatory Compliance
- X Significant Characteristic relating to Process Control
- KC Control Dimension relating to Form - Fit - Function as defined by Cole Hersee Company and/or the Customer

Cole Hersee Co.
20 Old Colony Ave., South Boston, MA, 02127
Phn: 617-268-2100 Web: www.colehersee.com

FORM CHT-6 (2/07)	Used On or Ref.: 95060	Scale: 1:1	Drawn BY: A.VISCO	Date Drawn: 10/26/12	Pg. 1 of 1

Description: SW,ROT,IGN,PLSTC

Drawing / Part No.: 95061-36

Current Rev. B