THIS DRAWING AND THE INFORMATION CONTAINED WITHIN IT ARE CONFIDENTIAL AND MAY NOT BE COPIED OR DISCLOSED WITHOUT THE WRITTEN PERMISSION OF LITTELFUSE.

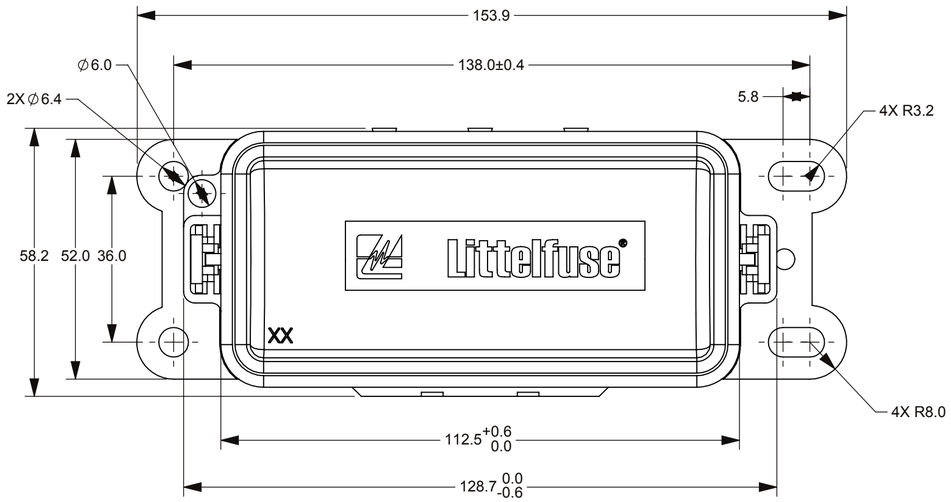

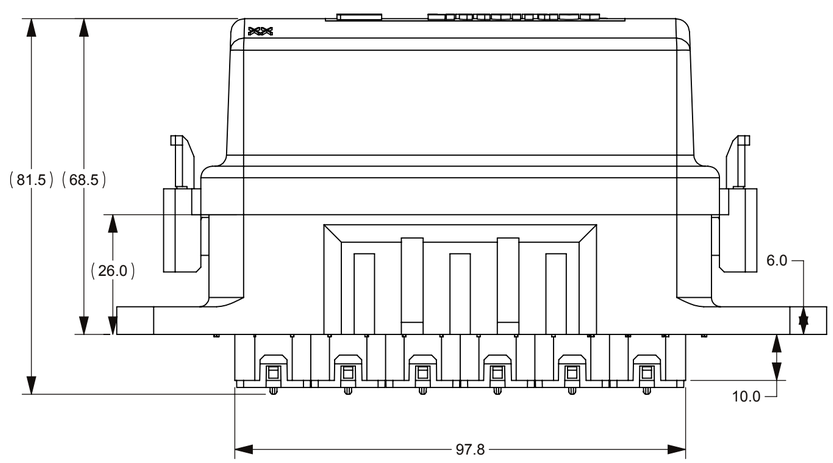

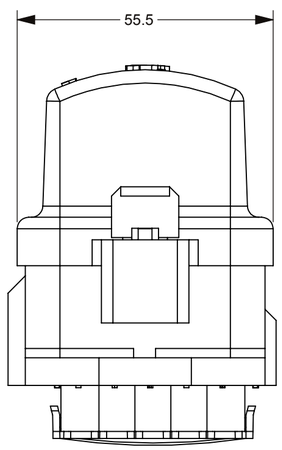

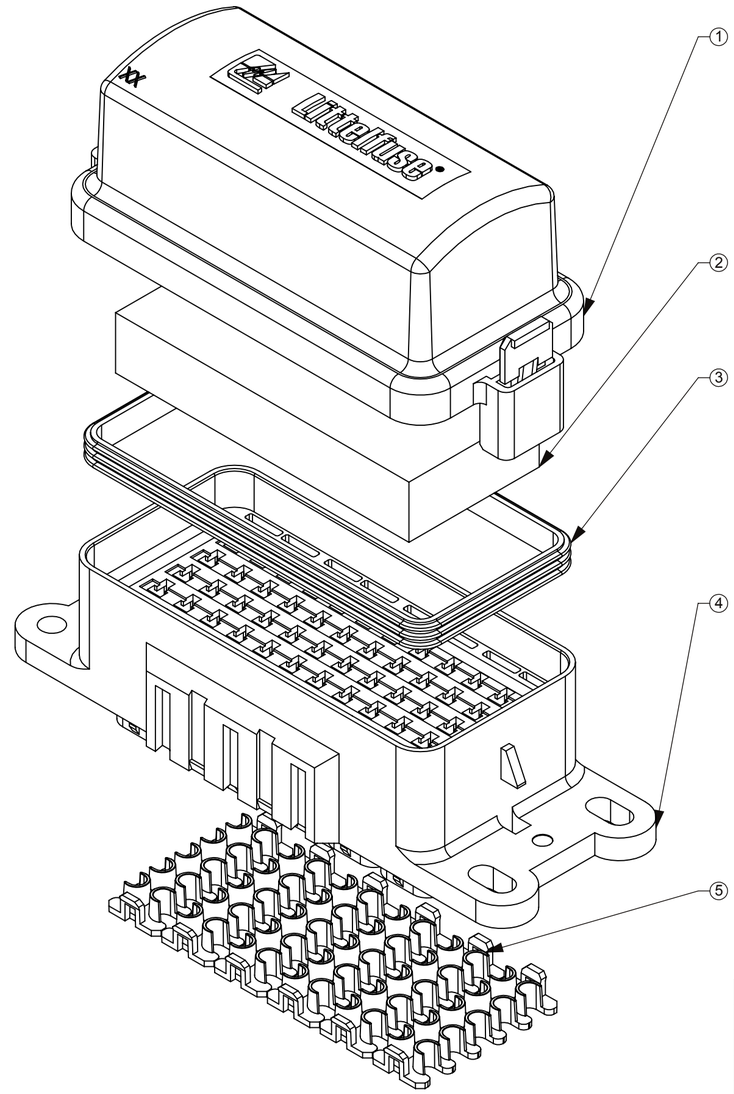

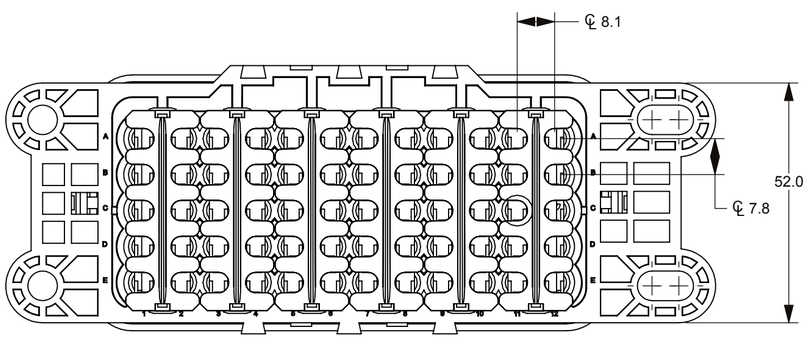

NOTES:
1. MATERIAL:
   BASE/COVER: PA66 30% GF, BLACK
   TPA: PA, BLUE
   SEAL: SILICONE RUBBER, GREEN
   FOAM: SILICONE RUBBER, RUST RED
2. TORQUE RATING (ON FLAT SURFACE): 6-8 Nm USING M6 BOLT & LOCK WASHER.
3. FUSE RATING: 30A PER CIRCUIT.
4. IP SEALING CLASS PER IEC60529 IP66 & IP67.
5. TERMINAL RETENTION PER USCAR 2 SECTION 5.4.1.3 USING PROPER DELPHI METRI-PACK TERMINALS (SEALED/TANGLESS):
6. TPA RETENTION PER USCAR 2 SECTION 5.4.5.4
7. MAX CONTINUOUS CURRENT: 250A FOR ENTIRE FUSEHOLDER.
8. FOAM IS PRESSED INTO BOTTOM OF COVER.
9. ADD SILVER/WHITE 'XX' MARK ON COVER CORNER.

FEMALE TERMINAL FOR MINI FUSE

CABLE SIZE mm^2	FEMALE TERMINAL (DELPHI 280 SEAL)	CABLE DIAMETER	CABLE SEAL (DELPHI 280 METRI-PACK REEL/LOOSE)	COLOR
0.50 - 0.35	12084201	1.70 - 1.29	12034365 / 15324983	DARK RED
1.0 - 0.50	12077411	2.15 - 1.60	12089444 / 15324985	PURPLE
3.0 - 2.0	12129493	2.42 - 2.03	12041352 / 15324984	TAN
2.0 -1.0	15363933	2.85 - 2.03	12015284 / 15324982	GREEN
3.0 - 2.0	12129493	3.49 - 2.81	12015359 / 15324980	GRAY
5.0	12077413	4.30 - 3.45	12015360 / 15324981	BLUE
		CAVITY PLUG	12010300	GREEN

REVISIONS

ZONE	REV.	DESCRIPTION	DATE	APPROVED
	A	508048ERA - NEW RELEASE FYUE	11/APR/2013	
	B	508297ECA - UPDATE TOLERANCE BASE ON ACTUAL PART . FYUE	21/MAY/2013	
	C	508647ECA - SEE ECO FYUE	24/JUN/2013	
	C	ECO 520021 - UPDATE DIMENSIONS TO MATCH MATAMOROS LITTELFUSE MOLDING PROCESS : 153.9MM (WAS 154.5), 58.2MM (WAS 58.4), 68.5MM (WAS 68.4), 81.5MM (WAS 81.4). ADD DIA 6.0MM, ADD FEMALE TERMINAL PART NO. REMOVE OPERATION & STORAGE TEMPERATURE (WAS -40*C TO 125*C). REDRAWN CAD IN SOLIDWORKS USING NEW CVP DRAWING FORMAT & TOLERANCE . AHOANG	26/OCT/2018	A JOZWIAK

NO.	COMPONENT NO.	COMPONENT NAME	QTY	U/M
1	873-029	COVER	1	EA
2	901-319	FOAM	1	EA
3	901-315	SEAL	1	EA
4	868-163	BASE	1	EA
5	883-083	TPA	6	EA

DIMENSIONS ARE SHOWN IN MILLIMETERS. DIMENSIONS AND TOLERANCES ARE DEFINED ACCORDING TO ANSI/ASME Y14.5-1994.

●	FIT FUNCTION CRITICAL CHARACTERISTICS SYMBOL
<S>	SAFETY/ COMPLIANCE CRITICAL CHARACTERISTICS SYMBOL
CPK	DENOTES CPK DIMENSIONS MINIMUM CPK VALUE
⟨ST⟩	DENOTES A CHARACTERISTIC THAT PROVIDES AN INDICATION OF PROCESS PERFORMANCE.PROCEDURE FOR MEASUREMENTAND TRACKINGTO BE DEFINED IN LITTELFUSE INSPECTION INSTRUCTIONS
CP	DENOTES CP DIMENSIONS, -MINIMUM CP VALUE MUST BE WITHIN THE DIMENSIONAL LIMITATIONS SHOWN ON DRAWING AND INITIALLY LOCATED TO ALLOW FOR MAXIMUM TOOL LIFE

DIMENSION; MM TOLERANCES UNLESS OTHERWISE SPECIFIED
ONE PLACE DECIMAL ± 0.5 THREE PLACES DECIMAL ± 0.100
TWO PLACES DECIMAL ± 0.20 ANGULAR ± 2°

	NAME	DATE
DRAWN	FYUE	11/APR/2013
CHECKED	-	-
	-	-
	-	-

FORM NO: CVP-PE40-0006 REV A

THIRD ANGLE PROJECTION

DO NOT SCALE DRAWING

Littelfuse®
Expertise Applied | Answers Delivered

TITLE
60 WAY FUSE HOLDER (NAVISTAR)

SIZE C | DWG. NO. OL-PDM21002LXM | OUTLINE | REV. D

SCALE 1:1 | SHEET 1 OF 1