MM	IN
0.25	.010
1.59	.055
3.17	.125
4.57	.180
6.35	.250
9.65	.380
11.04	.435
11.20	.441
16.00	.630
50.29	1.980

9216

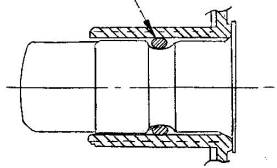

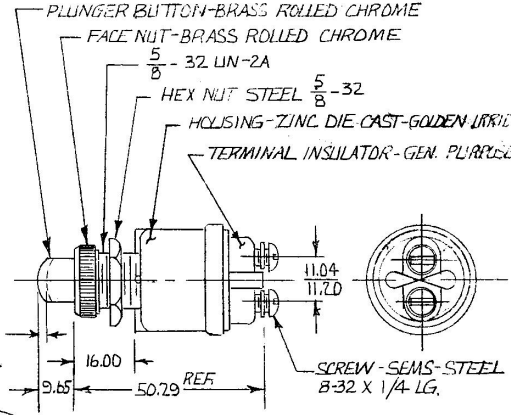

NORMALLY OPEN, CONTACTS CLOSED WHEN PLUNGER DEPRESSED 1.39/3.17 THRU REMAINDER OF 4.57/6.35 FULL TRAVEL.

SWITCH SHOWN IN "OFF" POSITION

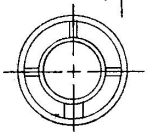

NOTE:
1. "O" RING SEALED AT MOUNTING BUSHING ONLY.
2. SILVER CONTACT SURFACES.
3. ALL EXTERIOR METAL PARTS MAY BE CAD. OR ZINC PLT. (CLEAR DICHROMATE DIP) UNLESS NOTED.

METRIC

(P) FRONT VIEW OF CASE

COLE-HERSEE CO.

Confidential Property of Cole Hersee

DO NOT SCALE

LET	WAS	DATE	BY	LET	WAS	DATE	BY
				P	ADDED/6235/6	8-17-87	L.Z.
				N	REDRAWN & ADD. METRIC	6/6/77	D.L.

MATERIAL	DRAWN	CHECKED	APPRV'D.	SCALE	DATE DRAWN
	JP			1-1	5-29-58
FINISH	COLE-HERSEE COMPANY BOSTON, MASS. 02127, U.S.A.				DATE BLUEPRINT
TOLERANCES. FRACTIONAL ± DECIMAL ±.025	INDUSTRIAL START SWITCH				9216