MM	IN
0 13	0 005
5 60	0 220
6 35	0 250
9 65	0 380
12 70	0 500
13 34	0 525
14 22	0 560
15 88	0 625
16 65	0 655
26 67	1 050
33 30	1 310
71 40	2 810
81 80	3 220
99 87	3 932
110 10	4 335
128 52	5 060
138 68	5 460
157 22	6 190
167 38	6 590
214 37	8 440
224 53	8 840

CHART

M-426

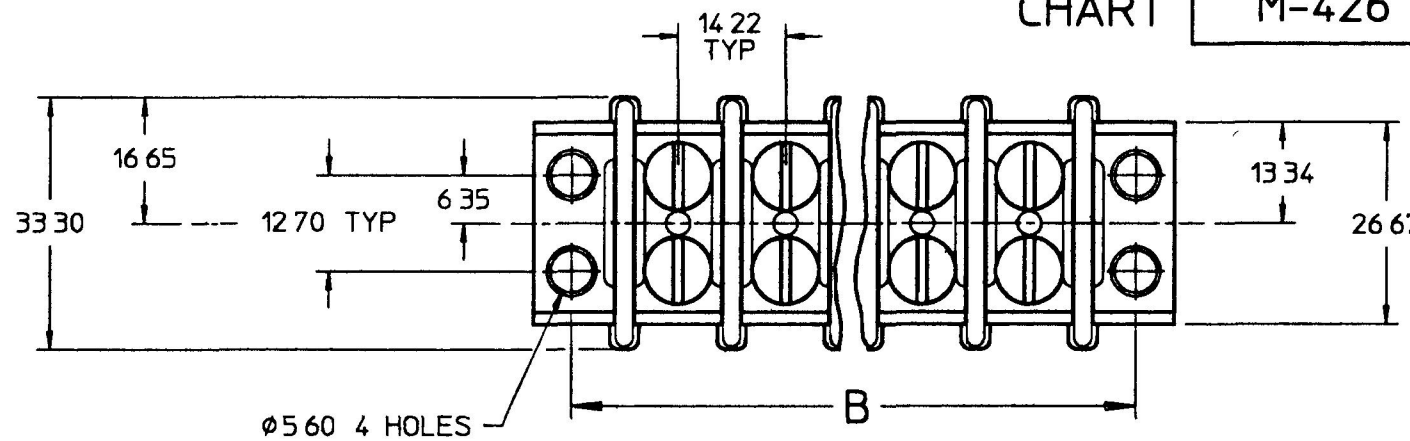

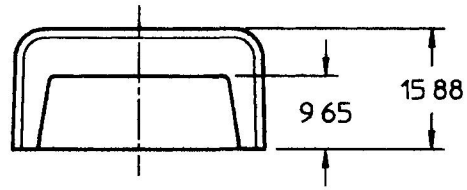

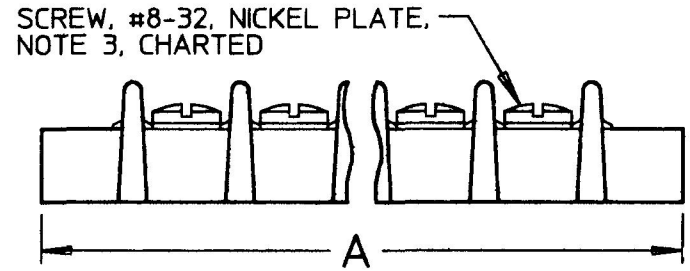

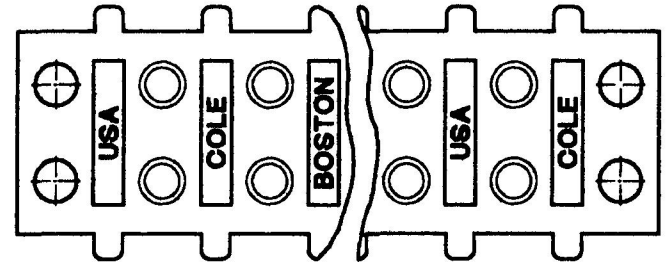

METRIC

PART NO	DIM A	DIM B	# OF SCREWS
M-456	224 53	214 37	28
M-429	167 38	157 22	20
M-428	138 68	128 52	16
M-427	110 10	99 87	12
M-426	81 80	71 40	8

NOTES
1 ALL STEEL PARTS PLATED
2 ALL DIMENSIONS ARE REFERENCE ONLY UNLESS SPECIFIED OTHERWISE
(D) 3 SCREWS MAY BE SLOTTED OR CROSS RECESSED HEAD AT COLE HERSEE'S DISCRETION

DO NOT SCALE

LET	WAS	DATE	BY	LET	WAS	DATE	BY
				D	ECN 98170 ADDED CHART	03/04/98	JMP

MATERIAL	DRAWN	CHK	APVD	SCALE		DATE DRAWN
	RG			11		1/30/59
FINISH	Cole Hersee Co. 20 OLD COLONY AVENUE, BOSTON, MA, USA, 02127					DATE BLUEPRINTED
TOLERANCES DECIMAL ± ANGLE ±	TERMINAL BLOCK					M-426

Confidential Property of Cole Hersee