REVISION		
REV	DATE	DESCRIPTION
A	3/21/2011	501865ERP - RELEASE MRY

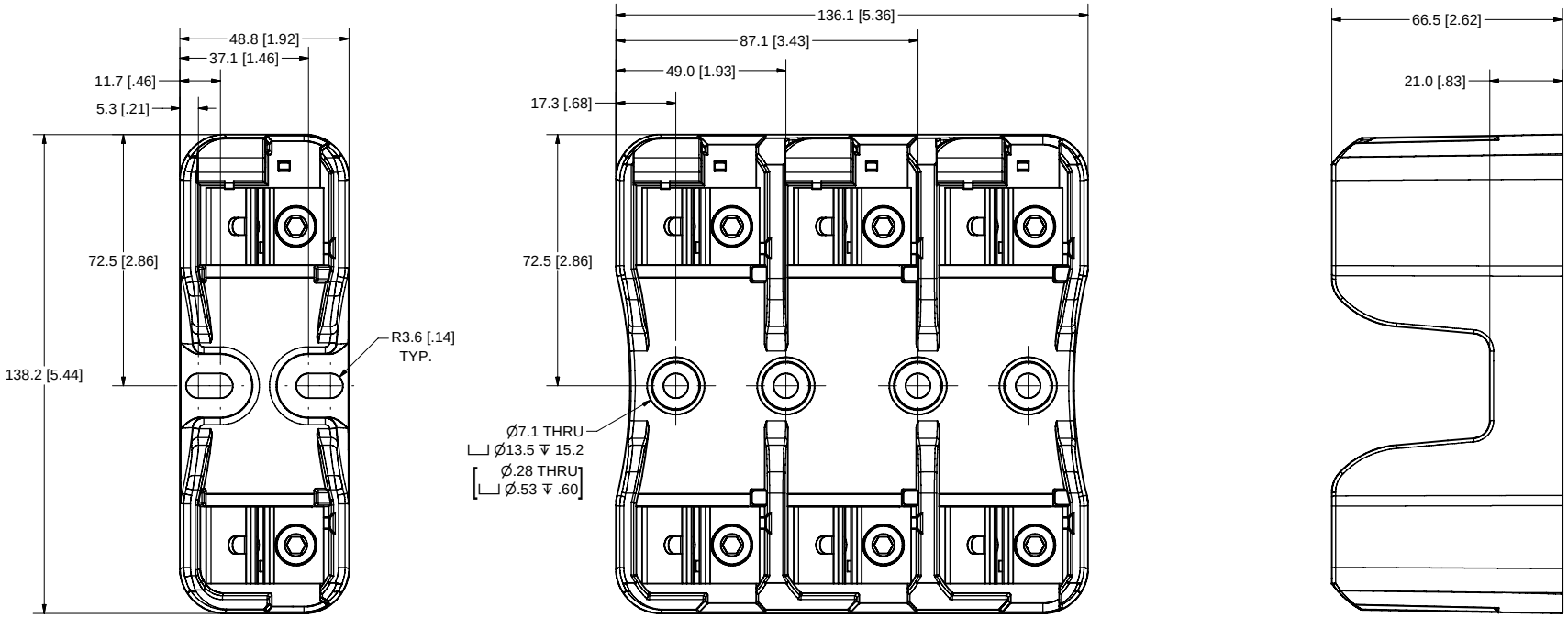

SPECIFICATIONS:

VOLTAGE RATING: 600V

AMPERE RATING: 100 AMPERES

INTERRUPT RATING: 200kA

TERMINAL TYPE: BOX LUG

SUGGESTED TORQUE: 13.6 N-m (120 IN-LBS) 2/0-6 AWG
4.5 N-m (40 IN-LBS) 8 AWG
4.0 N-m (35 IN-LBS) 10-14 AWG

WIRE RANGE: 2/0-14 AWG Cu/Al
SOLID/STRANDED

APPROVALS: UL LISTED (FILE NO. E14721)
CSA CERTIFIED (FILE NO. LR7316)

●	DENOTES CRITICAL CHARACTERISTICS.
CPK	DENOTES CPK DIMENSIONS, -MINIMUM CPK VALUE
(ST)	DENOTES A CHARACTERISTIC THAT PROVIDES AN INDICATION OF PROCESS PERFORMANCE. PROCEDURE FOR MEASUREMENT AND TRACKING TO BE DEFINED IN LITTELFUSE INSPECTION INSTRUCTIONS.
CP	DENOTES CP DIMENSIONS, -MINIMUM CP VALUE MUST BE WITHIN THE DIMENSIONAL LIMITATIONS SHOWN ON DRAWING AND INITIALLY LOCATED TO ALLOW FOR MAXIMUM TOOL LIFE.

C

MATL SPEC		FINISH	
DRW M. York	DATE 3/21/2011	SCALE NTS	FINISH GOOD WT GRAMS/PIECE

UNLESS OTHERWISE SPECIFIED, DIMENSIONS ARE IN MILLIMETERS, DIMENSIONS IN BRACKETS [ ] ARE INCHES DIMENSIONING AND DO NOT INCLUDE PLATING. TOLERANCING TO BE INTERPRETED IN ACCORDANCE WITH ANSI Y14.5M-1994

3RD ANGLE PROJECTION

TITLE LFJ60100 SERIES OUTLINE

Littelfuse® DES PLAINES, ILLINOIS 60016

REVISION A

DRWG NO. OL-LFJ60100 Series

SHEET 1 OF 1