342 Series

Panel Mount Enclosed Fuseholders for 3AG/AB Fuses

Dimensions

General Application / Straight Terminal Product Dimensions

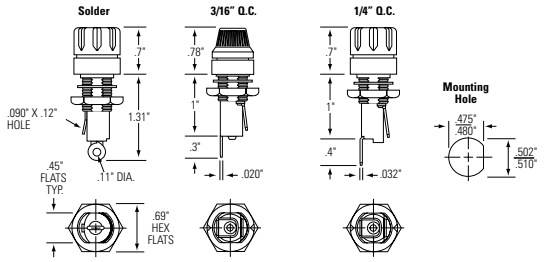

General Application / Right Angle Terminal Product Dimensions

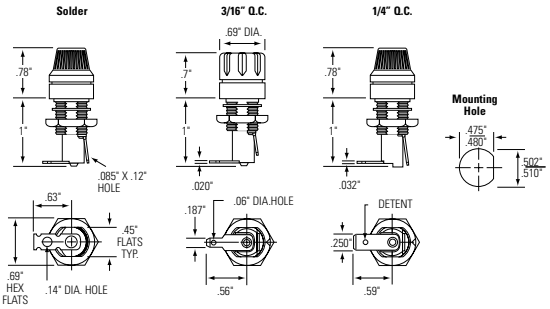

Watertight Product Dimensions

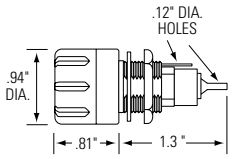

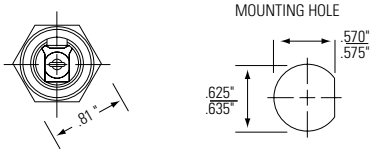

Product Characteristics

	General Application Products	Watertight Product
Compatible Fuses	3AG/AB	
Electrical	Rated at 20 amperes for any voltage up to 250	
Ambient Temperature	–40°C to +85°C	
Dielectric Strength	2400 volts minimum	1500 volts minimum
Mounting	Withstands 15 lb.-in. mounting torque; maximum panel thickness: .187"	Withstands 15 lb.-in. mounting torque; maximum panel thickness is .250"
Molded Parts	Black thermoplastic (UL94 V-0)	Black thermoset (UL94 V-0)
Seal	Neoprene washer provide drip-proof protection on the front side of the panel (upon request)	O-ring provides a watertight seal on the front side of the panel per MIL-PRF-19207
Terminals	Copper & copper alloy. Tin plated, except ¼" Quick-Connect terminals are nickel plated	Copper & copper alloy. Tin plated
Hardware	Comes with a mounting nut and neoprene washer	O-rings (2) and hex nut, unassembled
Ingression Protection Rating	IP40	IP67

Agency Approvals

Agency	Agency File Number
	E14721
	7316 (*Except 342 006)

Ordering Information

Body Terminal Type		Catalog Number	
Angle	**Connect**	**Fluted Knob**	**Knurled Knob**
General Application Products			
Straight	Solder	342 014	342 012
	3/16" Q.C.	342 038	342 058
	1/4" Q.C.	342 838	342 858
Right Angle	Solder	342 004	342 022
	3/16" Q.C.	342 028	342 048
	1/4" Q.C.	342 828	342 848
Watertight Product			
Straight	Solder	342 006 *	Not Applicable

Note: Refer to Fuseology for information on proper fuseholder re-rating.

Additional Information

Resources | **Accessories** | **Samples**

Disclaimer Notice - Information furnished is believed to be accurate and reliable. However, users should independently evaluate the suitability of and test each product selected for their own applications. Littelfuse products are not designed for, and may not be used in, all applications. Read complete Disclaimer Notice at: www.littelfuse.com/disclaimer-electronics.

© 2021 Littelfuse, Inc.
Specifications are subject to change without notice.
Revised: GD. 06/04/21