MHP-TAC Series Breakers (Thermal Cutoff Devices)

Metal Hybrid PPTC

Additional Information

Resources | Accessories | Samples

Circuit Diagram

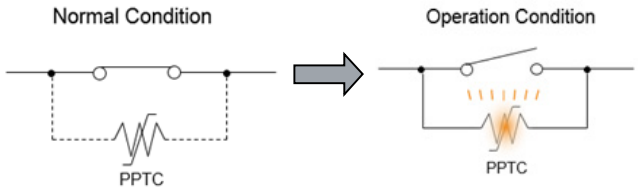

Agency Approvals

Agency	Agency File Number
c UL us	E349829
	DK-75944-UL

Description

The new Metal Hybrid PPTC breaker, MHP-TAC, offers higher voltage rating (12VDC) and smaller size than typical MHP-TAM breakers. MHP-TAC helps to meet the battery safety requirements of higher-capacity Lithium (Ion) Polymer and Prismatic batteries found in most mobile devices such as laptop PC's, tablets, and smart phones. MHP technology connects a bimetal protector in parallel with a Polymeric Positive Temperature Coefficient (PPTC) device. The PPTC device is to act as a heater and to help keep the bimetal latched until the fault is removed. The resulting MHP-TAC helps to provide resettable overtemperature protection.

Features

- High voltage rating
- Overtemperature and overcurrent protection for Lithium (Ion) Polymer and Prismatic cells
- Multiple activation temperature ratings (72°C, 77°C, 82°C, 85°C, and 90°C)
- Compact size (L: 4.75mm x W: 2.8mm x H: 0.8mm) allows for ultra thin battery pack designs
- Evaluated to UL 60730-1, UL 60730-2-9, CAN/CSA E60730-1, CAN/CSA E730-2-9, IEC 60730-1 and IEC 60730-2-9

Applications

Battery cell protection for Lithium Polymer and Prismatic cells used in:

- Notebook PCs
- Ultra-books
- Tablets
- Smart Phone
- Battery-powered portable devices

Typical Electrical Ratings

Part Description	MHP-TAC15-12-72N	MHP-TAC15-12-77N	MHP-TAC15-12-82N	MHP-TAC15-12-85N	MHP-TAC15-12-90N
Operation Temperature	72°C+/-5°C	77°C+/-5°C	82°C+/-5°C	85°C+/-5°C	90°C+/-5°C
Ordering Part Number	RF4780-000	RF4781-000	RF4782-000	RF4783-000	RF4784-000
Reset Temperature	**≥40°C**	**≥40°C**	**≥40°C**	**≥40°C**	**≥40°C**
Contact Rating	DC 12V/25A, 6000 Cycles				
Maximum Breaking Current	DC 5V/80A, 100 Cycles				
Minimum Hold Voltage	3V				
Maximum Leakage Current	150mA@25°C				
Hold Current	15A@25°C				
Resistance	5 milliohms Max.				
Operating Temperature Range	-30~100°C				

© 2021 Littelfuse, Inc.
Specifications are subject to change without notice.
Revised: GD. 09/03/21

MHP-TAC Series Breakers (Thermal Cutoff Devices)

Metal Hybrid PPTC

Part Description	MHP-TAC6-12-72N	MHP-TAC6-12-77N	MHP-TAC6-12-82N	MHP-TAC6-12-85N
Operation Temperature	72°C+/-5°C	77°C+/-5°C	82°C+/-5°C	85°C+/-5°C
Ordering Part Number	RF4788-000	RF4789-000	RF4790-000	RF4791-000
Reset Temperature	**≥40°C**	**≥40°C**	**≥40°C**	**≥40°C**
Contact Rating	DC 12V/12A, 6000 Cycles			
Maximum Breaking Current	DC 5V/40A, 100 Cycles			
Minimum Hold Voltage	2V			
Maximum Leakage Current	150mA@25°C			
Hold Current	6A@25°C			
Resistance	15 milliohms Max.			
Operating Temperature Range	-30~100°C			

Precautions for Electrical Characteristics

a. Device electrical characteristics may change depending on installation conditions. Users should independently evaluate the suitability of and test each product in their own application.

b. If any terminal or lead extensions are added to the device, especially in the case of high current discharging, the device performance may be negatively impacted due to variations in welding methods or materials. Please avoid designs that might cause heat to be generated around the joints of the lead extensions or on the extended terminals.

c. SMT solder reflow, wave-soldering and manual soldering irons are not permitted.

Precautions for Rating

a. The power supply voltage must be less than the rated voltage of the device. Operation above the voltage rating may result in device damage, smoking or flame.

b. Designs must be selected in such a manner that the device hold current is higher than the normal current value in the circuit and that the device trip current is lower than the abnormal current value. Selecting device hold current and trip current values that are too low for the application may interrupt the circuit under normal usage conditions.

c. This product should not be used in an application where the maximum interrupt current can be exceeded in a short circuit condition.

d. The devices are intended for protection against damage caused by occasional over current or over temperature fault conditions and should not be used when repeated fault conditions or prolonged trip events are anticipated.

e. The devices may not perform as specified if mechanical pressure is added while the device is in the tripped state or exposed to temperature conditions over 100°C.

Dimensions

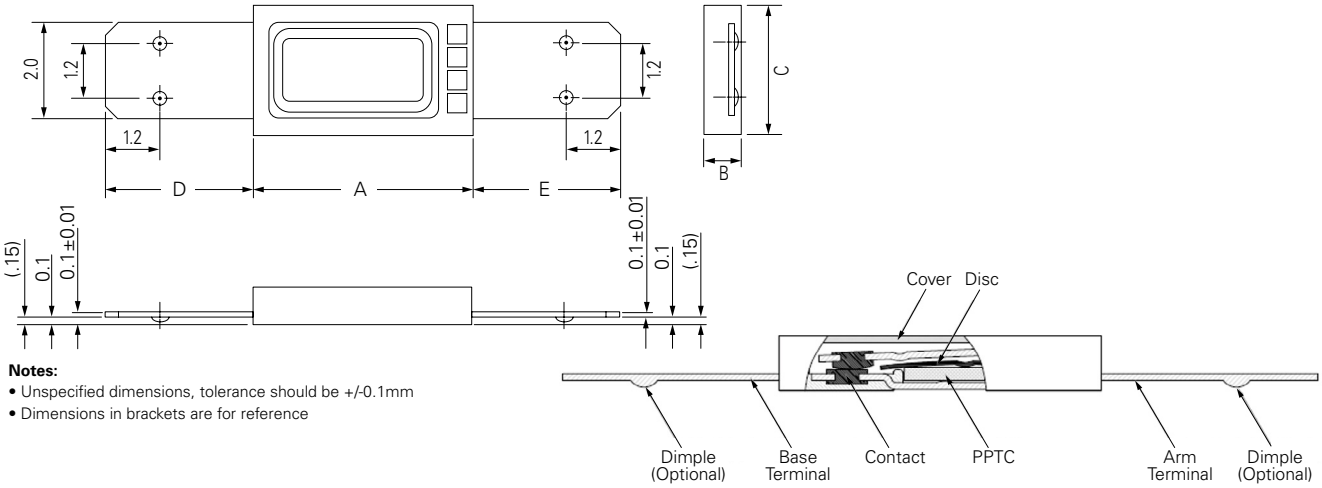

Notes:
- Unspecified dimensions, tolerance should be +/-0.1mm
- Dimensions in brackets are for reference

Unit = mm	A		B		C		D		E	
	MIN	MAX	MIN	MAX	MIN	MAX	MIN	MAX	MIN	MAX
	4.65	4.85	0.75	0.85	2.7	2.9	3.1	3.3	3.1	3.3

© 2021 Littelfuse, Inc.
Specifications are subject to change without notice.
Revised: GD. 09/03/21

MHP-TAC Series Breakers (Thermal Cutoff Devices)

Metal Hybrid PPTC

Current Vs. Temperature Curves

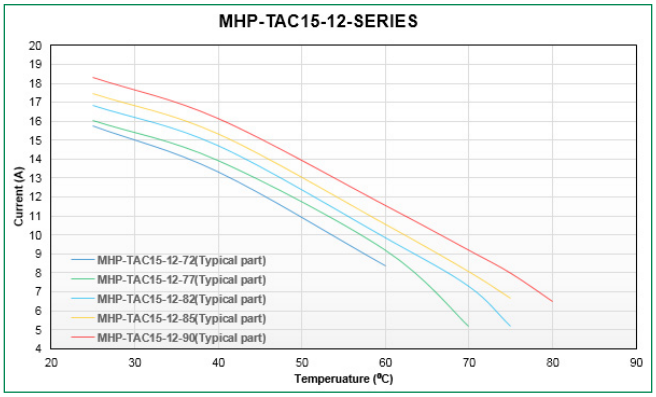

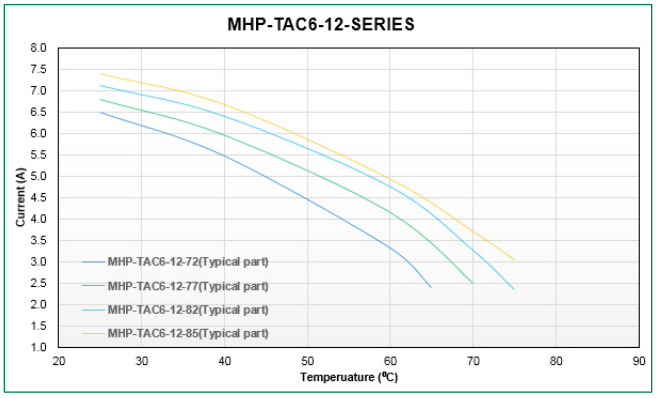

The current vs. temperature curve was derived from placing test samples in an oven at 25°C, 40°C, 60°C, 70°C, 75°C, and 80°C, increasing current flow through the sample at a rate of 0.1 A/minute and recording the current value when the sample trips.

Part Naming System

MHP TAC 15 - 12 - 77 N

- **TERMINAL TYPE**
  N: Non Dimple
  (BLANK): With Dimple
- **NOMINAL ACTIVATION TEMPERATURE**
  72, 77, 82, 85, 90
- **CONTACT VOLTAGE RATING**
- **NOMINAL HOLD CURRENT AT ROOM TEMPERATURE**
- **PRODUCT GROUP**
- **SERIES NAME**

Part Marking System

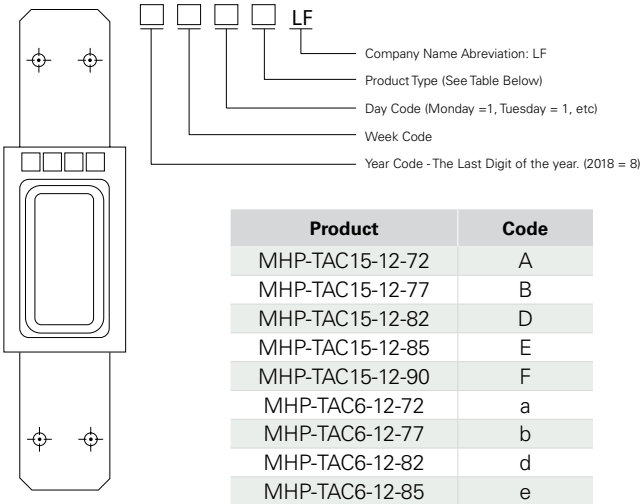

Product	Code
MHP-TAC15-12-72	A
MHP-TAC15-12-77	B
MHP-TAC15-12-82	D
MHP-TAC15-12-85	E
MHP-TAC15-12-90	F
MHP-TAC6-12-72	a
MHP-TAC6-12-77	b
MHP-TAC6-12-82	d
MHP-TAC6-12-85	e

Application Environment

The device is intended to be used for applications which are common for general electronic devices. Usage in any of the special environments or conditions as listed below may adversely impact the device performance and therefore users should carefully consider conditions of use of the end product and the potential impact on reliability or performance when incorporating this device into any design to carefully examine the actual performance and reliability of the device.

- Environment where the devices are exposed to water, oil, chemical solutions, and/or organic solvents.
- Installation in an area close to a heat source or adjacent to or near flammable objects such as plastic wires.
- Environment in which the device is constrained by pressure, sealing or resin coating.
- Environment where water condenses on the device.
- Environment with salt air or with corrosive gas such as CL2, H2S, NH3, SO2, and NOX.
- Environment with grit and dust and/or under direct sunlight.
- Environment outside of recommended operating temperature.

Packaging

Packaging Option	Quantity	Quantity & Packaging Code
20,000 pcs. Minimum	1000 pcs/bag	1 bag per inner box 20 inner box in 1 outer box

© 2021 Littelfuse, Inc.
Specifications are subject to change without notice.
Revised: GD. 09/03/21

MHP-TAC Series Breakers (Thermal Cutoff Devices)

Metal Hybrid PPTC

Precautions for Rating

a. The power supply voltage must be less than or equal to the rated voltage of the device. Operation above the voltage rating may result in device damage, smoke or flame.

b. Designs must be selected in such a manner that the device hold current is higher than the normal current value in the circuit. Selecting device hold current that is too low for the application may interrupt the circuit under normal usage conditions.

c. This product should not be used in an application where the maximum short circuit current available exceeds the rated maximum breaking current of the product.

d. The devices are intended for protection against damage caused by occasional over current or over temperature fault conditions and should not be used when repeated fault conditions or prolonged trip events are anticipated.

e. The devices may not perform as specified if mechanical pressure is added while the device is in the tripped state or exposed to temperature conditions over 100°C or in temperature conditions under -30°C.

Handling Precautions

a. The device is composed of plastic parts, please do not clamp or dent the housing with a tool as this might cause a resistance increase and product damage.

b. When welding product terminals or mounting the breaker on battery (cell), please be careful not to apply excessive bending, twisting or force on the product and terminals. The excessive stress might cause a resistance increase or product damage.

Please refer to following cautions.

- Do not apply more than 10N bend force to product. (Fig. 1)
- Do not apply more than 1.5cN*m twist torque to the product. (Fig. 2)
- Do not apply more than 20N deflection force to product. (Fig. 3)
- Do not apply more than 2N force to the terminals. (Fig. 4)
- Do not apply more than 0.6cN*m twisting torque to the terminals. (Fig. 5)
- Do not bend the terminals more than 45° at the end. (Fig. 6)
- Should not twist terminals more than 20°C with breaker body fixed.

c. Product terminals can be welded using direct welding and series welding methods. In either case, please use a suitable Jig so that the device will not be subjected to the stress conditions listed above.

d. Pull strength and detach strength of the terminal welds are per user requirements. However, if the welding is controlled by resistance, the measurement should be made as close as possible to the weld point by a "4-point clip method" using milliohm meter to ensure accuracy.

e. Please avoid putting the stress on the device, as listed above, when a jig, fitting or additional welding process is used. Please re-confirm the resistance value whenever a new process is added.

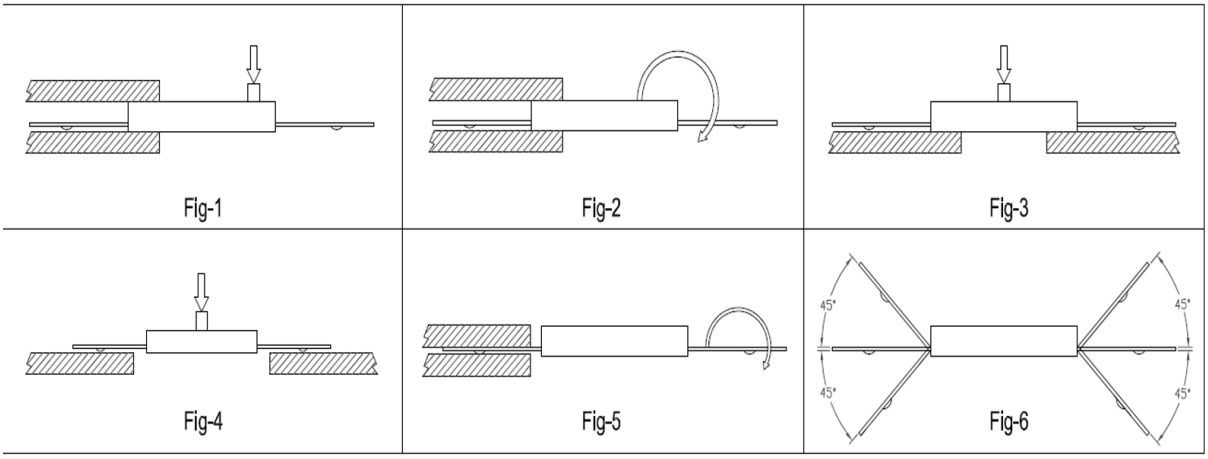

Disclaimer Notice - Information furnished is believed to be accurate and reliable. However, users should independently evaluate the suitability of and test each product selected for their own applications. Littelfuse products are not designed for, and may not be used in, all applications. Read complete Disclaimer Notice at www.littelfuse.com/disclaimer-electronics.

© 2021 Littelfuse, Inc.
Specifications are subject to change without notice.
Revised: GD. 09/03/21