3714 Kinnear Place Saskatoon, SK Canada S7P 0A6 Ph: (306) 373-5505 Fx: (306) 374-2245 www.littelfuse.com/relayscontrols

FPS DEVICENET INTERFACE

REVISION 0-A-041114

QUICK SETUP

- Use the OPI to access the *Setup* | *Hardware* | *Network Comms* menu. Set the *Network ID* for the device (63 maximum). Set the *Baud Rate* as *DN 125K*, *DN 250K*, or *DN 500K*. Select the DeviceNet producing assembly (input) from the *DeviceNet Produce* menu and the DeviceNet consuming assembly (output) from the *DeviceNet Consume* menu. Select *DeviceNet* from the *Network Type* menu. The assembly types can also be set using parameter 10 and 11 via configuration software.

- Configure the scanner's polled connections for the selected assembly sizes. The scanner may issue a configuration warning if an I/O size other than the default is used. Disregard the warning. See Section 3.5 for byte sizes.

Copyright © 2014 Littelfuse Startco

All rights reserved.

Document Number: PM-1151-EN
Printed in Canada

TABLE OF CONTENTS

SECTION PAGE

1 General 1
2 DeviceNet Interface 1
2.1 Network Settings 1
2.2 Product Manual Notes 1
2.3 Communication Status Display 2
2.4 DeviceNet LED Indication 2
2.5 Network Errors 2
2.6 Configuration Using RSNetWorx 2
3 DeviceNet Objects 2
3.1 Identity Object 3
3.2 Message Router 3
3.3 DeviceNet Object 4
3.4 DeviceNet Connection Object 5
3.5 Assembly Object 7
3.6 Control Supervisor Object 9
3.7 Overload Class 0x2C 15
3.8 Set Point Class 0x64 17
3.9 Inverse Curve Class 0x65 22
3.10 Digital Input Class 0x66 23
3.11 Analog I/O Class 0x67 25
3.12 RTD Module Class 0x68 27
3.13 RTC Class 0x69 30
3.14 User Register Class 0x6A 31
3.15 Data Logging Class 0x6B 32
Appendix A FPS DeviceNet EDS Files 35
Appendix B FPS DeviceNet Interface Revision History 36

LIST OF FIGURES

FIGURE PAGE

1 Outline Drawing 1

DISCLAIMER

Specifications are subject to change without notice. Littelfuse Startco is not liable for contingent or consequential damages, or for expenses sustained as a result of incorrect application, incorrect adjustment, or a malfunction.

This page intentionally left blank.

1. GENERAL

This document describes the DeviceNet features supported by the FPS. The FPS supports Explicit and Polled I/O. It does not support the Unconnected Message Manager (UCMM).

The FPS requires supply voltage connected to L1 and L2 to power the control unit and 24-Vdc supply voltage to power the isolated DeviceNet transceiver circuit. The DeviceNet transceiver circuit requires 70 mA @ 24-Vdc from the DeviceNet power supply.

2. DEVICENET INTERFACE

2.1 NETWORK SETTINGS

DeviceNet settings are located in the *Setup* | *Hardware* | *Network Comms* menu. Prior to making changes to network settings via the OPI, it is recommended to set the *Network Type* to *None*. Set *Network ID* to the slave number. Set the *Baud Rate* to *DN 125K*, *DN 250K* or *DN 500K*. Select the producing assembly instance using the *DeviceNet Produce* menu and the consuming assembly instance using the *DeviceNet Consume* menu. See Section 3.5 for assembly details. Once the changes have been made, select *DeviceNet* from the *Network Type* menu.

2.2 PRODUCT MANUAL NOTES

Appendix E, Register 661: Baud rate selections (Type T17 in Appendix F) includes DeviceNet selections 5:125 kb, 6:250 kb, and 7: 500 kb.

Appendix E, Register 663: Network ID range is 0 to 63. Values greater than 63 will be forced to 63.

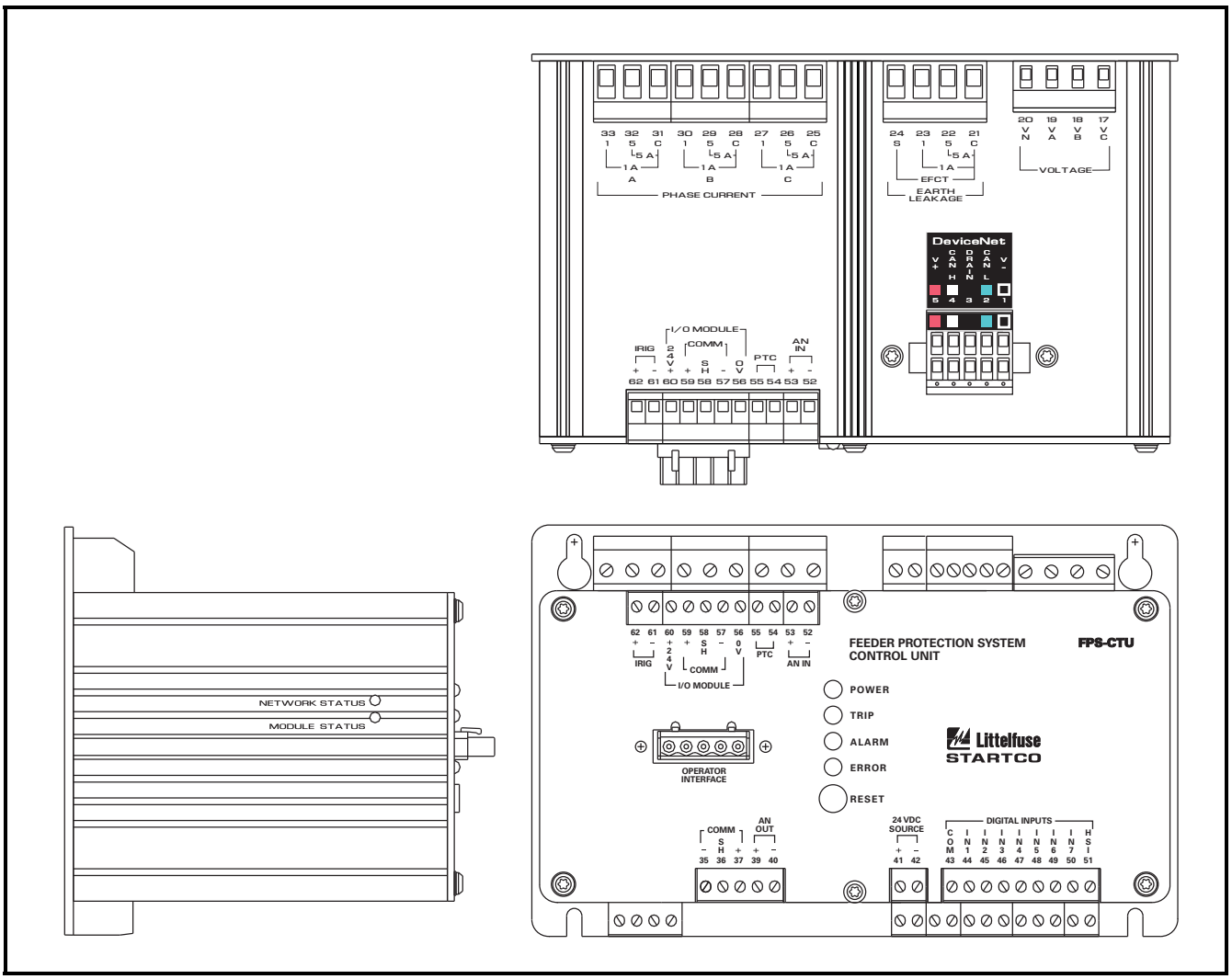

FIGURE 1. Outline Drawing.

2.3 Communication Status Display

The DeviceNet communication status can be viewed using the *Metering* | *Comm State* menu.

This menu indicates the connection state as ONLINE or OFFLINE. The last communication error is also displayed. The FPS can be programmed to trip if the connection is OFFLINE. The FPS is OFFLINE when there are no connections established and ONLINE when at least one connection is established.

2.4 DeviceNet LED Indication

Two LED's labeled MODULE STATUS (MS) and NETWORK STATUS (NS) are located on the left side of the control unit as shown in Fig. 1. The MS LED is green when the DeviceNet driver is operational. If this LED is off, verify that *DeviceNet* is selected from the *Setup* | *Hardware* | *Network Comms* | *Network Type* menu.

The NS LED is off when the FPS is the only device on the network. It flashes green when the FPS is physically connected to a network containing other devices but has no established communication connections. It is solid green when a Polling or Explicit Messaging connection is established. It flashes red when one or more connections have timed out. It is solid red if a Duplicate MAC ID or Bus-off error has occurred. Red LED indication requires a restart of the DeviceNet driver. This is done by, unplugging and re-connecting the DeviceNet connector, cycling supply voltage or by using the *Setup* | *Hardware* | *Network Comms* | *Network Type* menu. Select *None* to shut down the driver and then select *DeviceNet* to restart.

2.5 Network Errors

The FPS can be configured to trip or alarm on a network error using the *Setup* | *Hardware* | *Network Comms* | *Network Error* menu, or by using attribute 0x64 of the DeviceNet object.

The Network Error set point sets the action to be taken when the module is off line. Selections are Trip, Alarm, Trip and Alarm, or No Trip or Alarm. Network errors can originate from network watchdog timeouts or the network hardware in the FPS.

The last error code is displayed in the *Metering* | *Comm State* menu. The error codes are listed in the following table.

DeviceNet Error Codes

Error	Description
1	Receive Overrun
2	Transmit Overrun
3	CAN Overrun
4	IO Send
5	Duplicate MAC
6	Bus Sense
7	MAC Was Set
8	ID Reset 0
9	ID Reset 1
10	Bus Off
11	CAN ESET
12	CAN ERESET
13	Explicit Timeout
14	IO Timeout
15	IO Delete
16	No CAN Interface

2.6 Configuration Using RSNetWorx

Use the EDS Wizard to register the eds file. The device will register as a Motor Starter named FPS. Select device properties to view Device Parameters. When there is a request to upload from device, select this option. This will load the present configuration from the FPS.

3. DeviceNet Objects (In Order of Class Number)

The module supports the following objects:

Class	Description
0x01	Identity
0x02	Message Router
0x03	DeviceNet
0x04	Assembly
0x05	Connection
0x29	Control Supervisor
0x2C	Overload
0x64	Set Point
0x65	Inverse Curve
0x66	Digital Input
0x67	Analog I/O
0x68	RTD Module
0x69	RTC Clock
0x6A	User Registers
0x6B	Data Logging

3.1 Identity Object

Identity Object Class Services

Get_Attribute_Single: Returns contents of specified attribute.

Identity Class (1), Instance (0) Attributes

Attribute Number	Attribute Name	Services	Description	Default, Minimum, Maximum	Data Type
1	Revision	Get	Revision of this object.	1	UINT
2	Max Instance	Get	Maximum number of instances.	1	UINT

Identity Object Instance Services

Get_Attribute_Single: Returns contents of specified attribute.

Set_Attribute_Single: Modify the specified attribute.

Reset: Performs reset services based on the parameter.

No Parameter or Parameter = 0: The DeviceNet driver is reset with the existing MAC ID and baud rate.

Parameter = 1: The MAC ID is set to 63 and the baud rate is set to 125 kb. The FPS will then perform a reset that emulates cycling control power.

Identity Class (1), Instance (1) Attributes

Attribute Number	Param	Attribute Name	Services	Description	Default, Minimum, Maximum	Data Type	Comm Register
1		Vendor ID	Get	Identification of each vendor by number.	691	UINT	
2		Device Type	Get	Motor Starter	22	UINT	
3		Product Code	Get	Platform Type	205	UINT	0
4		Revision	Get	Major revision must match the EDS value.	1.001	A2 02 C6 C6	
5		Status	Get	Summary Status of the device.	0, 0, 255	WORD	
6	1	Serial Number	Get	Serial Number	N/A, 0, 999999999	UDINT	2
7		Product Name	Get	Human Readable Identification	"Startco FPS"	SHORT_ STRING	
100 (0x64)	2	Revision	Get	Revision of Firmware 100 = 1.00	N/A, 100, N/A	UINT	1
101 (0x65)	3	System Name	Get/Set	22 characters. Only 20 significant.	"Startco FPS"	SHORT_ STRING	750
102 (0x66)	4	Password	Get/Set	22 characters. Only 4 significant.	"1111"	SHORT_ STRING	740
103 (0x67)	5	Password Timeout	Get/Set	Sets password timeout in minutes.	10, 1, 60	REAL	506/507

3.2 Message Router

No attributes supported for this object.

3.3 DEVICENET OBJECT

DeviceNet Object Class Services

Get_Attribute_Single: Returns contents of specified attribute.

DeviceNet Class (3), Instance (0) Attributes

ATTRIBUTE NUMBER	ATTRIBUTE NAME	SERVICES	DESCRIPTION	DEFAULT, MINIMUM, MAXIMUM	DATA TYPE
1	Revision	Get	Revision of the DeviceNet object class. Definition upon which the implementation is based.	1	UINT

DeviceNet Object Instance Services

Get_Attribute_Single: Returns contents of specified attribute.

Set_Attribute_Single: Modify specified attribute.

Allocate_Master/Slave_Connection_Set:

Release_Master/Slave_Connection_Set:

DeviceNet Class (3), Instance (1) Attributes

ATTRIBUTE NUMBER	DEVICENET PARAMETER	ATTRIBUTE NAME	SERVICES	DESCRIPTION	DEFAULT, MINIMUM, MAXIMUM	DATA TYPE	COMM REGISTER
1		MAC ID	Get/Set	Node Address	63, 0, 63	USINT	
2		Baud Rate	Get/Set	The baud rate of the device: 0 = 125 kb 1 = 250 kb 2 = 500 kb	0, 0, 2	USINT	
3		Buss-Off Interrupt	Get/Set	Define Processing of BOI 0 = Hold CAN in Reset 1 = Automatic CAN Reset Set to 0 on powerup or when ID Reset is used. In both cases existing connections are lost.	0, 1, 0	BOOL	
4		Buss-Off Counter	Get/Set	Number of times CAN went to the bus-off state. Writing any value clears the counter. Count held at 255.	0, 0, 255	USINT	
5		Allocation Information	Get	Master/Slave Allocation Indication	Array	BYTE, USINT	
100 (0x64)	6	Net Trip Action	Get/Set	Trip Action taken on communication error: 0 = Disable 1 = Trip1 2 = Trip2 3 = Trip3 4 = Trip1 & Trip2 5 = Trip1 & Trip3 6 = Trip1 & Trip2 & Trip3 7 = Trip2 & Trip3	0, 0, 7	UINT	665
101 (0x65)	7	Net Alarm Action	Get/Set	Action taken on communication error: 0 = Disable 1 = Alarm1 2 = Alarm2 3 = Alarm3 4 = Alarm1 & Alarm2 5 = Alarm1 & Alarm3 6 = Alarm1 & Alarm2 & Alarm3 7 = Alarm2 & Alarm3	0, 0, 7	UINT	666

3.4 DEVICENET CONNECTION OBJECT

Connection Object Class Services

Get_Attribute_Single: Returns contents of specified attribute.

Set_Attribute_Single: Modify specified attribute.

DeviceNet Connection Class (5), Instance (0) Attributes

ATTRIBUTE NUMBER	DEVICENET PARAMETER	ATTRIBUTE NAME	SERVICES	DESCRIPTION	DEFAULT, MINIMUM, MAXIMUM	DATA TYPE
1		Revision	Get	Revision of this Connection Object Class.	1	UINT
100 (0x64)	10	Polled Cons ID	Get/Set	Specifies output assembly ID.(1) 0 = None (Default) 1 = Basic Overload (0x02) 2 = Basic Motor Starter (0x03)	0, 0, 2	UINT
101 (0x65)	11	Polled Prod ID	Get/Set	Specifies Input assembly ID. (2) 0 = None (Empty EPATH) 1 = Basic Overload (0x32) 2 = Extended Overload (0x33) 3 = Basic Motor Starter (0x34) 4 = Extended Motor Starter 1 (0x35) 5 = User Registers (0x64)	5, 0, 5	UINT

(1) Can also be set using Class 5, Instance 2, Attribute 16 path. See 3.5 for byte sizes. ID1 and ID2 are 1 byte.

(2) Can also be set using Class 5, Instance 2, Attribute 14 path. See 3.5 for byte sizes. ID3 and ID4 are 1 byte, ID5 is 64 bytes.

Connection Object Instance Services

Get_Attribute_Single: Returns contents of specified attribute.

Set_Attribute_Single: Modify specified attribute.

Delete: Delete specified connection instance.

Reset: Reset the connection instance.

DeviceNet Connection Class (5), Explicit Connection Instance (1) Attributes

ATTRIBUTE NUMBER	DEVICENET PARAMETER	ATTRIBUTE NAME	SERVICES	DESCRIPTION	DEFAULT, MINIMUM, MAXIMUM	DATA TYPE
1		State	Get	State of the object: 0 = Nonexistent 1 = Configuring 3 = Established 4 = Timed Out 5 = Deferred Delete	1, 0, 5	USINT
2		Instance Type	Get	Indicates either IO or messaging connection.	0, 0, 0	USINT
3		Transport Class Trigger	Get	Defines behavior of the connection.	0x83	BYTE
4		Produced Cnxn ID	Get	Placed in CAN Identifier field when the connection transmits.		UINT
5		Consumed Cnxn ID	Get	CAN Identifier Field value that denotes message to be received.		UINT
6		Initial Comm Characteristics	Get	Defines the Message Group(s) across which productions and consumptions associated with this Connection occur.		BYTE
7		Produced Connection Size	Get	Maximum number of bytes transmitted across this connection.	254	UINT
8		Consumed Connection Size	Get	Maximum number of bytes received across this connection.	254	UINT

DeviceNet Connection Class (5), Explicit Connection Instance (1) Attributes (Continued)

Attribute Number	DeviceNet Parameter	Attribute Name	Services	Description	Default, Minimum, Maximum	Data Type
9		Expected Packet Rate	Get/Set	Defines timing (ms) associated with this Connection. Resolution is 10 ms.	2500, 0, 65535	UINT
12 (0x0C)		Watchdog Timeout Action	Get/Set	Defines how to handle inactivity/watchdog timeouts. 1 = Auto Delete 3 = Deferred Delete	1, 1, 3 Set to 1 or 3	USINT
13 (0x0D)		Produced Connection Path Length	Get	Number of bytes in the produced_connection_path length attribute.	0	UINT
14 (0x0E)		Produced Connection Path	Get	Application Object producing data on this connection.	{}	EPATH
15 (0x0F)		Consumed Connection Path Length	Get	Number of bytes in the consumed_connection_path length attribute.	0	UINT
16 (0x10)		Consumed Connection Path	Get	Specifies the Application Object(s) that are to receive the data consumed by this connection object.	{}	EPATH
17 (0x11)		Production Inhibit Time	Get/Set	Defines minimum time (ms) between new data production.	0	UINT

DeviceNet Connection Class (5), Polled I/O Connection Instance (2) Attributes

Attribute Number	DeviceNet Parameter	Attribute Name	Services	Description	Default, Minimum, Maximum	Data Type
1		State	Get	State of the object: 0 = Nonexistent 1 = Configuring 3 = Established 4 = Timed Out	0, 0, 4	USINT
2		Instance Type	Get	Indicates either IO or messaging connection. 0 = Explicit Message 1 = I/O Message	1, 0, 1	USINT
3		Transport Class Trigger	Get	Defines behavior of the connection.	0x83	BYTE
4		Produced Cnxn ID	Get	Placed in CAN Identifier field when the connection transmits.		UINT
5		Consumed Cnxn ID	Get	CAN Identifier Field value that denotes message to be received.		UINT
6		Initial Comm Characteristics	Get	Defines the Message Group(s) across which productions and consumptions associated with this Connection occur.		BYTE
7		Produced Connection Size	Get	Maximum number of bytes transmitted across this connection.	Defined by Assembly Instance	UINT
8		Consumed Connection Size	Get	Maximum number of bytes received across this connection.	Defined by Assembly Instance	UINT
9		Expected Packet Rate	Get/Set	Defines timing (ms) associated with this connection.	0, 0, 65535, N/A, N/A	UINT
12 (0x0C)		Watchdog Timeout Action	Get	Defines how to handle inactivity/watchdog timeouts. 0 = Transition to Time Out 1 = Auto Delete 2 = Auto Reset	0, 0, 0	USINT

DeviceNet Connection Class (5), Polled I/O Connection Instance (2) Attributes (Continued)

ATTRIBUTE NUMBER	DEVICENET PARAMETER	ATTRIBUTE NAME	SERVICES	DESCRIPTION	DEFAULT, MINIMUM, MAXIMUM	DATA TYPE
13 (0x0D)		Produced Connection Path Length	Get	Number of bytes in the produced_connection_path length attribute. Symbolic notation.	3, 3, 3	UINT
14 (0x0E)		Produced Connection Path	Get/Set	Application Object producing data on this connection.	62 33 36	EPATH
15 (0x0F)		Consumed Connection Path Length	Get	Number of bytes in the consumed_connection_path length attribute. Symbolic notation.	3	UINT
16 (0x10)		Consumed Connection Path	Get/Set	Specifies the Application Object(s) that are to receive the data consumed by this Connection Object.	{}	EPATH
17 (0x11)		Production Inhibit Time	Get/Set	Defines minimum time (ms) between new data production.	0	UINT

3.5 ASSEMBLY OBJECT

Assembly Object Class Services

Get_Attribute_Single: Returns contents of specified attribute.

Assembly Class (4), Instance (0) Attributes

ATTRIBUTE NUMBER	ATTRIBUTE NAME	SERVICES	DESCRIPTION	DEFAULT, MINIMUM, MAXIMUM	DATA TYPE
1	Revision	Get	Revision of this object.	1	UINT
2	Max Instance	Get	Maximum instance of assembly.	0x64	UINT

Assembly Object Instance Services

Get_Attribute_Single: Returns assembly-instance data. Applies to both output and input instances.

Set_Attribute_Single: Set assembly instance data. Applies to output instances only. Service not supported for input instances.

The following static input instances are supported and can be selected by setting parameter 473 to the desired ID:

PRODUCING ASSEMBLY ID	INSTANCE	DESCRIPTION	DATA SIZE IN BYTES	SYMBOLIC IO CONNECTION PATH
1	50 (0x32)	Basic Overload	1	62 33 32
2	51 (0x33)	Extended Overload	1	62 33 33
3	52 (0x34)	Basic Motor Starter	1	62 33 34
4	53 (0x35)	Extended Motor Starter 1	1	62 33 35
5	103 (0x67)	User Registers (1) (Default)	64	62 36 34

(1) Requires configuration of the User Defined Registers defined by parameters 451 to 466 and set via RSNetWorx or the User Registers menu. SIZE IS FIXED AT 64 BYTES. See Assembly Class 4, Instance 0x67, Attribute 3.

The following static output instance are supported and can be selected by setting parameter 472 to the desired ID:

CONSUMING ASSEMBLY ID	INSTANCE (1)	DESCRIPTION	DATA SIZE IN BYTES	SYMBOLIC IO CONNECTION PATH
1	2 (0x02)	Basic Overload	1	62 30 32
2	3 (0x03)	Basic Motor Starter (Default)	1	62 30 33

(1) Default is None.

Assemblies are configured using attributes 0x64 and 0x65 of Class 5, or selected by setting the Produced and Consumed connection path attribute in the Polled I/O connection instance. Setting the path to empty (no data), will disable production or consumption and the corresponding connection size will be zero.

Assemblies are accessed using Polled I/O or can be read using Explicit Messaging. For explicit messaging, the Class is 4, the Attribute is 3, and the Instance is the assembly instance number.

INSTANCE	SERVICES	CLASS_INSTANCE_ ATTRIBUTE
0x02	Get/Set	04_02_03
0x03	Get/Set	04_03_03
0x32	Get	04_32_03
0x33	Get	04_33_03
0x34	Get	04_34_03
0x35	Get	04_35_03
0x64	Get	04_64_03

Assembly Class (4), Instance (0x64), Attribute (3)

Produced Connection Path = "62 36 34"

This assembly is used to access any combination of sixteen user-defined registers. Assembly size is fixed at 64 bytes. User defined registers are programmed using the *Setup* | *Hardware* | *Network Comms* | *User Registers* menu, or by explicit messaging to Class 0x6A via the configuration tool. Register values are defined in Appendix E of the FPS manual. Each comm register in Appendix E defines a 16-bit value. For 32-bit float type (DeviceNet REAL), only the first register of the pair needs too be entered. For example, to configure an assembly to read the first four RTD temperatures in RTD Module 1, enter register numbers 902, 904, 906, 908 in sequence. The first 16 bytes of the assembly will contain the RTD data and the other 16 bytes do not contain any valid data. Register definitions resulting in more than 64 bytes of data will be ignored.

Scanner byte size must be set to 64 bytes in all cases.

Overload/Starter Instances

Instances 2 to 5 and 0x32 to 0x36 are assemblies containing attribute values from the Control Supervisor.

ASSEMBLY BIT	NAME	CLASS NAME	CLASS	INSTANCE	ATTRIBUTE
Bit 0	Faulted/Trip	Control Supervisor	0x29	1	10
Bit 1	Warning	Control Supervisor	0x29	1	11
Bit 2	Running 1	Control Supervisor	0x29	1	7
Bit 4	Ready	Control Supervisor	0x29	1	9
Bit 5	Control From Net	Control Supervisor	0x29	1	15

Assembly Class (4), Instance (0x32), Attribute (3) – Input – Basic Overload

Produced Connection Path = "62 33 32"

BYTE	BIT 7	BIT 6	BIT 5	BIT 4	BIT 3	BIT 2	BIT 1	BIT 0
0	Reserved	Reserved	Reserved	Reserved	Reserved	Reserved	Reserved	Faulted/ Trip

Assembly Class (4), Instance (0x33), Attribute (3) – Input – Extended Overload

Produced Connection Path = "62 33 33"

BYTE	BIT 7	BIT 6	BIT 5	BIT 4	BIT 3	BIT 2	BIT 1	BIT 0
0	Reserved	Reserved	Reserved	Reserved	Reserved	Reserved	Warning	Faulted/ Trip

Assembly Class (4), Instance (0x34), Attribute (3) – Input – Basic Starter
Produced Connection Path = "62 33 34"

BYTE	BIT 7	BIT 6	BIT 5	BIT 4	BIT 3	BIT 2	BIT 1	BIT 0
0	Reserved	Reserved	Reserved	Reserved	Reserved	Running1	Reserved	Faulted/ Trip

Assembly Class (4), Instance (0x35), Attribute (3) – Input – Extended Starter
Produced Connection Path = "62 33 35"

BYTE	BIT 7	BIT 6	BIT 5	BIT 4	BIT 3	BIT 2	BIT 1	BIT 0
0	Reserved	Reserved	CntrlfrmNet (2)	Ready (1)	Reserved	Running1	Warning	Faulted/ Trip

(1) No trips, all interlocks valid, all perrmissives valid, CB open. Alarms allowed.
(2) Must be in Remote Control, *Remote Group* must have *Net Control* enabled, *Control Type* other than *None*.

Assembly Class (4), Instance (0x02), Attribute (3) – Output – Basic Overload
Consumed Connection Path = "62 30 32"

BYTE	BIT 7	BIT 6	BIT 5	BIT 4	BIT 3	BIT 2	BIT 1	BIT 0
0	Reserved	Reserved	Reserved	Reserved	Reserved	FaultReset	Reserved	Reserved

Assembly Class (4), Instance (0x03), Attribute (3) – Output – Basic Starter
Consumed Connection Path = "62 30 33"

BYTE	BIT 7	BIT 6	BIT 5	BIT 4	BIT 3	BIT 2	BIT 1	BIT 0
0	Reserved	Reserved	Reserved	Reserved	Reserved	FaultReset	Reserved	Run1(3)

(3) Run1 generates a CLOSE provided that conditions outlined in notes (1) and (2) are satisfied.

3.6 CONTROL SUPERVISOR OBJECT

State Transition Diagram

Close/open control can be performed using the control supervisor class attributes. The control supervisor issues commands to the FPS as shown in the state diagram.

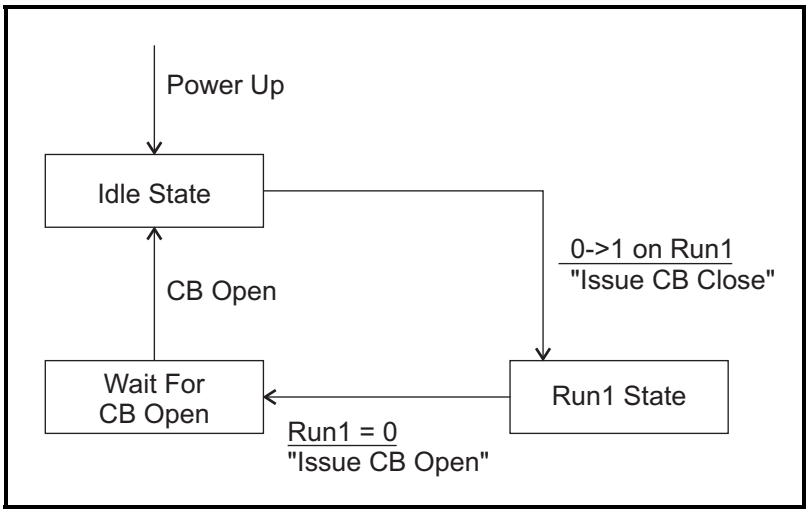

NOTES:
Commands issued are only processed if the CtrlFromNet (Attribute 15) is 1. For this bit to be set, the following conditions must be met:
1) A starter type other than NONE must be selected (Attribute 0x73).
2) FPS must be in REMOTE CONTROL.
3) Network control must be in the remote group (Attribute 0x72) - Default setting.
The user is responsible for setting Run1 bit (Attributes 3) to zero when an open or trip condition occurs.

Control Supervisor Object Class Services

Get_Attribute_Single: Returns contents of specified attribute.

Control Supervisor Class (0x29), Instance (0) Attributes

Attribute Number	Attribute Name	Services	Description	Default, Minimum, Maximum	Data Type
1	Revision	Get	Revision of this object.	1	UINT
2	Max Instance	Get	Maximum number of instances.	1	UINT

Supervisor Object Instance Services

Get_Attribute_Single: Returns contents of specified attribute.
Set_Attribute_Single: Modifies specified attribute.
Reset: Issues a STOP and transition to idle state.

Supervisor Class (0x29), Instance (1) Attributes

Attribute Number	Attribute Name	Services	Description	Default, Minimum, Maximum	Data Type	Comm Register
3	Run 1 (1)	Get/Set	Run 1 input from master.	0, 0, 1	BOOL	
7	Running 1 (1)	Get	Close Indication	0, 0, 1	BOOL	
9	Ready	Get	Ready (No Trips)	0, 0, 1	BOOL	
10 (0x0A)	Faulted	Get	One or more trips present.	0, 0, 1	BOOL	
11 (0x0B)	Warning	Get	One or more alarms present.	0, 0, 1	BOOL	
12 (0x0C)	Fault Rst	Get/Set	Reset issued on 0 → 1 transition.	0, 0, 1	BOOL	
15 (0x0F)	Ctrl From Net	Get	1 = Network Control Enabled	N/A	BOOL	

(1) Not applicable in Protection Only mode.

Supervisor Class (0x29), Instance (1) Attributes (continued)

Attribute Number	Param	Attribute Name	Services	Description	Default, Minimum, Maximum	Data Type	Comm Register
100 (0x64)	15	Command	Get/Set	A command "Set" will cause the requested command to be issued. A "Get" will read the last command. 0 = None 1 = Open 2 = Close 3 = Reset Trips 4 = Set RTC 5 = Clear Data Logging Records 6 = Clear Trips Counters 7 = Clear Energy Totals 8 = Clear Running Time 9 = Emergency I^2t Reset 10 = Select Local-Input Ctrl 11 = Release Local-Input Ctrl 12 = Re-enable Temperature Protection 13= Remote Trip Set 14= Remote Trip Clear 15= Remote Alarm Set 16= Remote Alarm Clear 17= Net Relay Set 18= Net Relay Clear	0, 0, 12	USINT	6
101 (0x65)	16	Reserved					
102 (0x66)	17	Reserved					
103 (0x67)	18	Reserved					
104 (0x68)	19	Reserved					
105(0x69)	20	Reserved					
106 (0x6A)	21	Trip Action	Get/Set	OPI Loss Trip Action 0 = Disable 1 = Trip1 2 = Trip2 3 = Trip3 4 = Trip1 & Trip2 5 = Trip1 & Trip3 6 = Trip1 & Trip2 & Trip3 7 = Trip2 & Trip3	0, 0, 7	UINT	504
107 (0x6B)	22	# of OPI's	Get/Set	Selects the number of OPI's connected to the control unit. 0 = 1 OPI 1= 2 OPI's 2 = 3 OPI's	0, 0, 2	UINT	505
108 (0x6C)	23	Reserved					
109 (0x6D)	24	Reserved					
110 (0x6E)	25	Reserved					
111 (0x6F)	26	OPI Trips	Get	Number of OPI Comm Trips		UINT	1182
112 (0x70)	27	RemGrpDig	Get/ Set	Bind digital start sources to the REMOTE group. 0 = Include in Group 1 = Do Not Include in Group	0, 0, 1	UINT	524
113 (0x71)	28	RemGrpNet	Get/Set	Bind OPI start sources to the REMOTE group. 0 = Include in Group 1 = Not in Group	0, 0, 1	UINT	525
114 (0x72)	29	RemGrpOPI	Get/Set	Bind Net start sources to the REMOTE group. 0 = Include in Group 1 = Not in Group	0, 0, 1	UINT	526

Supervisor Class (0x29), Instance (1) Attributes (continued)

Attribute Number	Param	Attribute Name	Services	Description	Default, Minimum, Maximum	Data Type	Comm Register
115 (0x73)	30	CB Control Type	Get/Set	Selects the Device Control Type 0 = None 1 = Contractor 2 = 2-Coil Device	0, 0, 2	UINT	520
116 (0x74)	31	CB Trip Source	Get/Set	Defines which trip sources cause the breaker or contractor to open. 0= Disabled 1= Trip1 2= Trip2 3= Trip3 4= Trip1 or Trip2 5= Trip1 or Trip3 6= Trip1 or Trip2 or Trip3 7= Trip2 or Trip3	0, 0, 7	UINT	521
117 (0x75)	32	CB Trip Sense	Get/Set	Coil Supervisor Sense Location 0= None 1= CB Contact 2= CB Coil	0, 0, 2	UINT	522
118 (0x76)	33	CB Close Sense	Get/Set	Coil Supervisor Sense Location 0= None 1= CB Contact 2= CB Coil	0, 0, 2	UINT	523
119 (0x77)	34	CB Close Pulse	Get/Set	Circuit Breaker Close Pulse Width	0.3, 0.1, 5	REAL	527/528
120 (0x78)	35	CB Open Pulse	Get/Set	Circuit Breaker Open Pulse Width	0.3, 0.1, 5	REAL	529/530
121 (0x79)	36	OPI Local Control	Get/Set	0: Enable OPI Control 1: Disable OPI Control	0, 0, 1	UINT	531
122 (0x7A)	37	Open Retry	Get/Set	Breaker Open Retry Count	0, 0, 5	UINT	532
123 (0x7B)	38	Open Count	Get	Number of trips caused by an open key press when control type is set to None.		UINT	1176
124 (0x7C)	39	RY Status Trips	Get	Number of Contactor Status Trips		UINT	1177
125 (0x7D)	40	TC Supervisor Trips	Get	Number of Trip-Coil Supervisor Trips		UINT	1178
126 (0x7E)	41	CC Supervisor Trips	Get	Number of Close-Coil Supervisor Trips		UINT	1179
127(0x7f)	42	Reserved					
128 (0x80)	43	RY1 Function	Get/Set	Function Assigned to Relay 1 0 = None 1 = Trip1 2 = Trip2 3 = Trip3 4 = Alarm1 5 = Alarm2 6 = Alarm3 7 = CB Close 8 = CB-Open 9 = Contractor 10 = Trip1 Pulse 11 = Local 12 = Interlock 13 = Current 14 = Network Run1 15 = Group2 Selected 16 = Watchdog	0, 0, 16	UINT	610
129 (0x81)	44	RY1 Mode	Get/Set	0 = Fail Safe, 1 = Non Fail Safe	0, 0, 1	UINT	611

Supervisor Class (0x29), Instance (1) Attributes (continued)

Attribute Number	Param	Attribute Name	Services	Description	Default, Minimum, Maximum	Data Type	Comm Register
130 (0x82)	45	RY2 Function	Get/Set	See Attribute 0x80	0, 0, 16	UINT	612
131 (0x83)	46	RY2 Mode	Get/Set	0 = Fail Safe, 1 = Non Fail Safe	0, 0, 1	UINT	613
132 (0x84)	47	RY3 Function	Get/ Set	See Attribute 0x80	0, 0, 16	UINT	614
133 (0x85)	48	RY3 Mode	Get/Set	0 = Fail Safe, 1 = Non Fail Safe	0, 0, 1	UINT	615
134 (0x86)	49	RY4Function	Get/ Set	See Attribute 0x80	0, 0, 16	UINT	616
135 (0x87)	50	RY4 Mode	Get/Set	0 = Fail Safe, 1 = Non Fail Safe	0, 0, 1	UINT	617
136 (0x88)	51	RY5 Function	Get/ Set	See Attribute 0x80	0, 0, 16	UINT	618
137 (0x89)	52	RY5 Mode	Get/Set	0 = Fail Safe, 1 = Non Fail Safe	0, 0, 1	UINT	619
138 (0x8A)	53	RY Pulse Time	Get/Set	Specifies the duration of the trip pulse when the RY function is set to “Trip1 Pulse”.	0.25, 0.05, 10	REAL	620
144 (0x90)	54	TA Summary	Get	FPS Status Bit0: 1= Current > Threshold Bit1: 1= 3IO Picked Up Bit2: 1= Ph Picked Up Bit3: Reserved Bit4: 1= Trip1 Bit5: 1= Trip2 Bit6: 1= Trip3 Bit7: 1= Alarm1 Bit8: 1= Alarm2 Bit9: 1= Alarm3 Bit10: 1= ETR is ON Bit11: 1= PTC is Open Bit12: 1= Interdock Valid Bit13: 1= Permissive Valid Bit14: 1= Breaker Closed		WORD	1110
145 (0x91)	55	IO Status	Get	Bit 0: IN1 Voltage Detected Bit 1: IN2 Voltage Detected Bit 2: IN3 Voltage Detected Bit 3: IN4 Voltage Detected Bit 4: IN5 Voltage Detected Bit 5: IN6 Voltage Detected Bit 6: IN7 Voltage Detected Bit 7: Spare Bit 8: Relay 1 Energized Bit 9: Relay 2 Energized Bit 10: Relay 3 Energized Bit 11: Relay 4 Energized Bit 12: Relay 5 Energized		WORD	1111
146 (0x92)	56	Trip/Alarm Msg 0	Get	Trip and Alarm FIFO. See Main Product Manual Appendix F T90. 255= No trip or alarm.		UINT	1112
147 (0x93)	57	Trip/Alarm Msg 1	Get	Trip and Alarm FIFO. See Main Product Manual Appendix F T90. 255= No trip or alarm.		UINT	1113
148 (0x94)	58	Trip/Alarm Msg 2	Get	Trip and Alarm FIFO. See Main Product Manual Appendix F T90. 255= No trip or alarm.		UINT	1114
149 (0x95)	59	Trip/Alarm Msg 3	Get	Trip and Alarm FIFO. See Main Product Manual Appendix F T90. 255= No trip or alarm.		UINT	1115
150 (0x96)	60	Trip/Alarm Msg 4	Get	Trip and Alarm FIFO. See Main Product Manual Appendix F T90. 255= No trip or alarm.		UINT	1116
151 (0x97)	61	Reserved					
152 (0x98)	62	Reserved					

Supervisor Class (0x29), Instance (1) Attributes (continued)

Attribute Number	Param	Attribute Name	Services	Description	Default, Minimum, Maximum	Data Type	Comm Register
153 (0x99)	63	Reserved					
154 (0x9A)	64	Reserved					
155 (0x9B)	65	Reserved					
156 (0x9C)	66	CT Primary	Get/Set	CT Primary Rating (A)	100, 1, 5000	REAL	480/481
157 (0x9D)	67	EFCT Primary	Get/Set	EFCT Primary Rating (A)	5, 1, 5000	REAL	482/483
158 (0x9E)	68	System Voltage	Get/Set	Line-to-Line Voltage (kV)	0.6, 0.12, 75	REAL	484/485
159 (0x9F)	69	Vin Rating	Get/Set	Input Voltage at Rated System Voltage (kV)	0.12, 0.03, 0.6	REAL	486/487
160 (0xA0)	70	V Connection	Get/Set	Voltage Input Connection 0= None 1= 1PT 2= 2PT 3= 3PT / DIRECT	0,0,3	UINT	488/489
161 (0xA1)	71	Frequency	Get/Set	System Frequency 0 – 50, 1= 60 Hz	1, 0, 1	UINT	489
162 (0xA2)	72	Set-Point Group	Get/Set	Selects Set Point Group 0= Group1 1= Group2	0, 0, 1	UINT	490
163 (0xA3)	73	I_2/I_1 Threshold	Get/Set	Unbalance Threshold	0.25, 0.10, 0.50	REAL	491/ 492
164 (0xA4)	74	Reserved					
165 (0xA5)	75	Reserved					
166 (0xA6)	76	Reserved					
167 (0xA7)	77	Reserved					
168 (0xA8)	78	Reserved					
169 (0xA9)	79	Reserved					
170 (0xAA)	80	Reserved					
171 (0xAB)	81	Reserved					
172 (0xAC)	82	Reserved					
173 (0xAD)	83	Reserved					
174 (0xAE)	84	Reserved					
175 (0xAF)	85	Reserved					
176 (0xB0)	86	I_a	Get	Phase A Current (A)		REAL	860/861
177 (0xB1)	87	I_b	Get	Phase B Current (A)		REAL	862/863
178 (0xB2)	88	I_c	Get	Phase C Current (A)		REAL	864/865
179 (0xB3)	89	I_{ave}	Get	Average Current (A)		REAL	866/867
180 (0xB4)	90	I_{CT}	Get	EF CT Current (A)		REAL	868/869
181 (0xB5)	91	$3I_O$	Get	Calculated $3I_O$ (A)		REAL	870/871
182 (0xB6)	92	V_{ab}	Get	Line–Line Voltage (KV)		REAL	872/873
183 (0xB7)	93	V_{bc}	Get	Line–Line Voltage (KV)		REAL	874/875
184 (0xB8)	94	V_{ca}	Get	Line–Line Voltage (KV)		REAL	876/877
185 (0xB9)	95	V_a	Get	Line–Line Voltage (KV)		REAL	878/879
186 (0xBA)	96	V_b	Get	Line–Line Voltage (KV)		REAL	880/881
187 (0xBB)	97	V_c	Get	Line–Line Voltage (KV)		REAL	882/883
188 (0xBC)	98	S	Get	Apparent Power (KVA)		REAL	884/885
189 (0xBD)	99	Q	Get	Reactive Power (KVAR)		REAL	886/887
190 (0xBE)	100	P	Get	Real Power (KW)		REAL	888/889
191 (0xBF)	101	PF	Get	Power Factor		REAL	890/891
192 (0xC0)	102	Used I^2T	Get	Used Thermal Capacity ($^0/_0$)		REAL	892/893
193 (0xC1)	103	Thermal Trend	Get	Thermal Trend ($^0/_0$)		REAL	894/895
194 (0xC2)	104	Overload Time	Get	Overload Trip/ Reset Time (m)		REAL	896/897
195 (0xC3)	105	+SeqI	Get	Positive Sequence Current (pu)		REAL	898/899
196 (0xC4)	106	–SeqI	Get	Negative Sequence Current (pu)		REAL	900/901
197 (0xC5)	107	Unbalance I	Get	Current Unbalance (pu)		REAL	902/903

Supervisor Class (0x29), Instance (1) Attributes (continued)

Attribute Number	Param	Attribute Name	Services	Description	Default, Minimum, Maximum	Data Type	Comm Register
198 (0xC6)	108	+SeqV	Get	Positive Sequence Voltage (KV)		REAL	904/905
199 (0xC7)	109	–SeqV	Get	Negative Sequence Voltage (KV)		REAL	906/907
200 (0xC8)	110	Unbalance V	Get	Voltage Unbalance (pu)		REAL	908/909
201 (0xC9)	111	Analog I_n	Get	Analog Input (nA)		REAL	910/911
202 (0xCA)	112	Frequency	Get	Frequency of Voltage		REAL	912/913
203 (0xCB)	113	Run Time	Get	Running Time (s)		UDINT	914/915
204 (0xCC)	114	HS Frequency	Get	High-Speed Input Frequency		REAL	916/917
205 (0xCD)	115	KWs	Get	KW seconds		REAL	950/953
206 (0xCE)	116	KVAs	Get	KVA seconds		REAL	954/957
207 (0xCF)	117	KVARs	Get	KVAR seconds		REAL	958/961

3.7 Overload Class 0x2C

Overload Object Class Services

Get_Attribute_Single: Returns contents of specified attribute.

Set_Attribute_Single: Modify specified attribute.

Overload Class (0x2C), Instance (0) Attributes

Attribute Number	DeviceNet Parameter	Attribute Name	Services	Description	Default, Minimum, Maximum	Data Type	Comm Register
1		Revision	Get	Revision of this object.	1	UINT	
2		Max Instance	Get	Maximum number of instances.	1	UINT	
100 (0x64)	121	Reset Type	Get/Set	Specifies Type of Reset: 0= Normal 1= Autoreset 2= Rapid	0, 0, 2	UINT	44
100 (0x65)	122	Reset Level	Get/Set	Specifies Reset Level	0.3, 0.1, 0.9	REAL	45/46

Overload Object Instance Services

Get_Attribute_Single: Returns contents of specified attribute.

Set_Attribute_Single: Modify specified attribute.

Overload Class 0x2C, Instance 1 Attributes - Group 1

Attribute Number	DeviceNet Parameter	Attribute Name	Services	Description	Default, Minimum, Maximum	Data Type	Comm Register
100 (0x64)	123	Trip Action	Get/Set	0 = Disable 1 = Trip1 2 = Trip2 3 = Trip3 4 = Trip1 & Trip2 5 = Trip1 & Trip3 6 = Trip1 & Trip2 & Trip3 7 = Trip2 & Trip3	1, 0, 7	UINT	8

Overload Class 0x2C, Instance 1 Attributes - Group 1 (continued)

Attribute Number	Param	Attribute Name	Services	Description	Default, Minimum, Maximum	Data Type	Comm Register
101 (0x65)	124	Alarm Action	Get/Set	0 = Disable 1 = Alarm1 2 = Alarm2 3 = Alarm3 4 = Alarm1 & Alarm2 5 = Alarm1 & Alarm3 6 = Alarm1 & Alarm2 & Alarm3 7 = Alarm2 & Alarm3	1, 0, 7	UINT	9
102 (0x66)	125	Reserved					
103 (0x67)	126	Pickup	Get/Set	O/L Curve Pickup Level	1, 0.1, 1.25	REAL	11/12
104 (0x68)	127	Reserved					
105 (0x69)	128	H-Factor	Get/Set	Hot Factor Multiplier For I < 100%	0.5, 0.1, 1.0	REAL	15/16
106 (0x6A)	129	C-Factor	Get/Set	Time-Constant Multiplier When Cooling	2, 1, 10	REAL	17/18
107 (0x6B)	130	Time Constant	Get/Set	Thermal Time Constant in Minutes	10, 1, 60	REAL	19/20
108 (0x6C)	131	Alarm Level	Get/Set	Level Where Alarm Occurs	1.0, 0.5, 1.0	REAL	21/22
109 (0x6D)	132	Trip Count	Get	Counts Number of Trips		UINT	1130

Overload Class 0x2C, Instance 2 Attributes – Group 2

Attribute Number	DeviceNet Parameter	Attribute Name	Services	Description	Default, Minimum, Maximum	Data Type	Comm Register
100 (0x64)	133	Trip Action	Get/Set	0 = Disable 1 = Trip1 2 = Trip2 3 = Trip3 4 = Trip1 & Trip2 5 = Trip1 & Trip3 6 = Trip1 & Trip2 & Trip3 7 = Trip2 & Trip3	1, 0, 7	UINT	26
101 (0x65)	134	Alarm Action	Get/Set	0 = Disable 1 = Alarm1 2 = Alarm2 3 = Alarm3 4 = Alarm1 & Alarm2 5 = Alarm1 & Alarm3 6 = Alarm1 & Alarm2 & Alarm3 7 = Alarm2 & Alarm3	1, 0, 7	UINT	27
102 (0x66)	135	Reserved					
103 (0x67)	136	Pickup	Get/Set	O/L Curve Pickup Level	1, 0.1, 1.25	REAL	29/30
104 (0x68)	137	Reserved					
105 (0x69)	138	H-Factor	Get/Set	Hot Factor Multiplier For I < 100%	0.5, 0.1, 1.0	REAL	33/34
106 (0x6A)	139	C-Factor	Get/Set	Time-Constant Multiplier When Cooling	2, 1, 10	REAL	35/36
107 (0x6B)	140	Time Constant	Get/Set	Thermal Time Constant in Minutes	10, 1, 60	REAL	37/38
108 (0x6C)	141	Alarm Level	Get/Set	Level Where Alarm Occurs	1.0, 0.5, 1.0	REAL	39/40
109 (0x6D)	142	Trip Count	Get	Counts Number of Trips		UINT	1131

3.8 Set Point Class 0x64

Set Point Object Class Services

Get_Attribute_Single: Returns contents of specified attribute.

Set Point Class 0x64, Instance 0 Attributes

Attribute Number	Attribute Name	Services	Description	Default, Minimum, Maximum	Data Type
1	Revision	Get	Revision of this object.	5	UINT
2	Max Instance	Get	Number of last instance.	20	UINT

Set Point Object Instances

Set Point Object Instance Services

Get_Attribute_Single: Returns contents of specified attribute.

Set_Attribute_Single: Modifies specified attribute.

The set point class consists of seven attributes. Each set-point instance may use some or all of these attributes.

Attribute 1 - Trip Action

Specifies the action to take on a trip.
0 = Disable
1 = Trip1
2 = Trip2
3 = Trip3
4 = Trip1 & Trip2
5 = Trip1 & Trip3
6 = Trip1 & Trip2 & Trip3
7 = Trip2 & Trip3

Attribute 2 - Alarm Action

Specifies the action to take on an alarm.
0 = Disable
1 = Alarm1
2 = Alarm2
3 = Alarm3
4 = Alarm1 & Alarm2
5 = Alarm1 & Alarm3
6 = Alarm1 & Alarm2 & Alarm3
7 = Alarm2 & Alarm3

Attribute 3 - Trip Level

Attribute 4 - Trip Delay

Attribute 5 - Alarm Level

Attribute 6 - Alarm Delay

Attribute 7 - Trip Counter for the set point

Class 0x64, Instance 1 - Definite-Time Overcurrent, Group 1

Attribute Number	DeviceNet Parameter	Attribute Name	Services	Default, Minimum, Maximum	Data Type	Comm Register
1	150	Trip Action	Get/Set	0, 0, 7	UINT	70
2	151	Alarm Action	Get/Set	0, 0, 7	UINT	71
3	152	Trip Level	Get/Set	10, 1, 15	REAL	72/73
4	153	Trip Delay	Get/Set	0.05, 0, 10	REAL	74/75
5	154	Alarm Level	Get/Set	10, 0.1, 15	REAL	76/77
6	155	Alarm Delay	Get/Set	0.05, 0, 10	REAL	78/79
7	156	Trip Count	Get/Set		UINT	1134

Class 0x64, Instance 2 - Definite-Time Overcurrent, Group 2

Attribute Number	DeviceNet Parameter	Attribute Name	Services	Default, Minimum, Maximum	Data Type	Comm Register
1	157	Trip Action	Get/Set	0, 0, 7	UINT	84
2	158	Alarm Action	Get/Set	0, 0, 7	UINT	85
3	159	Trip Level	Get/Set	10, 1, 15	REAL	86/87
4	160	Trip Delay	Get/Set	0.05, 0, 10	REAL	88/89
5	161	Alarm Level	Get/Set	10, 0.1, 15	REAL	90/91
6	162	Alarm Delay	Get/Set	0.05, 0, 10	REAL	92/93
7	163	Trip Count	Get/Set		UINT	1135

Class 0x64, Instance 3 – $3I_0$ Definite-Time Earth Fault, Group 1

Attribute Number	DeviceNet Parameter	Attribute Name	Services	Default, Minimum, Maximum	Data Type	Comm Register
1	164	Trip Action	Get/Set	0, 0, 7	UINT	120
2	165	Alarm Action	Get/Set	0, 0, 7	UINT	121
3	166	Trip Level	Get/Set	10, 0.1, 15	REAL	122/123
4	167	Trip Delay	Get/Set	0.05, 0, 10	REAL	124/125
5	168	Alarm Level	Get/Set	10, 0.1, 15	REAL	126/127
6	169	Alarm Delay	Get/Set	0.05, 0, 10	REAL	128/129
7	170	Trip Count	Get		UINT	1138

Class 0x64, Instance 4 – $3I_0$ Definite-Time Earth Fault, Group 2

Attribute Number	DeviceNet Parameter	Attribute Name	Services	Default, Minimum, Maximum	Data Type	Comm Register
1	171	Trip Action	Get/Set	0, 0, 7	UINT	136
2	172	Alarm Action	Get/Set	0, 0, 7	UINT	137
3	173	Trip Level	Get/Set	10, 0.1, 15	REAL	138/139
4	174	Trip Delay	Get/Set	0.05, 0, 10	REAL	140,141
5	175	Alarm Level	Get/Set	10, 0.1, 15	REAL	142/143
6	176	Alarm Delay	Get/Set	0.05, 0, 10	REAL	144/145
7	177	Trip Count	Get		UINT	1139

Class 0x64, Instance 5 – EFCT Definite-Time, Group 1

Attribute Number	DeviceNet Parameter	Attribute Name	Services	Default, Minimum, Maximum	Data Type	Comm Register
1	178	Trip Action	Get/Set	0, 0, 7	UINT	150
2	179	Alarm Action	Get/Set	0, 0, 7	UINT	151
3	180	Trip Level	Get/Set	0.4, 0.01, 1	REAL	152/153
4	181	Trip Delay	Get/Set	0.25, 0, 100	REAL	154/155
5	182	Alarm Level	Get/Set	0.2, 0.01, 1	REAL	156/157
6	183	Alarm Delay	Get/Set	1, 0, 100	REAL	158/159
7	184	Trip Count	Get		UINT	1140

Class 0x64, Instance 6 - EFCT Definite-Time, Group 2

Attribute Number	DeviceNet Parameter	Attribute Name	Services	Default, Minimum, Maximum	Data Type	Comm Register
1	185	Trip Action	Get/Set	0, 0, 7	UINT	166
2	186	Alarm Action	Get/Set	0, 0, 7	UINT	167
3	187	Trip Level	Get/Set	0.4, 0.01, 1	REAL	168/169
4	188	Trip Delay	Get/Set	0.25, 0, 100	REAL	170/171
5	189	Alarm Level	Get/Set	0.2, 0.01, 1	REAL	172/173
6	190	Alarm Delay	Get/Set	1, 0, 100	REAL	174/175
7	191	Trip Count	Get		UINT	1141

Class 0x64, Instance 7 – Unbalance (I)

Attribute Number	DeviceNet Parameter	Attribute Name	Services	Default, Minimum, Maximum	Data Type	Comm Register
1	192	Trip Action	Get/Set	1, 0, 7	UINT	180
2	193	Alarm Action	Get/Set	1, 0, 7	UINT	181
3	194	Trip Level	Get/Set	0.25, 0.05, 1	REAL	182/183
4	195	Trip Delay	Get/Set	15, 1, 100	REAL	184/185
5	196	Alarm Level	Get/Set	0.10, 0.05, 1	REAL	186/187
6	197	Alarm Delay	Get/Set	10, 1, 100	REAL	188/189
7	198	Trip Count	Get		UINT	1142

Class 0x64, Instance 8 – Phase Loss (I)

Attribute Number	DeviceNet Parameter	Attribute Name	Services	Default, Minimum, Maximum	Data Type	Comm Register
1	199	Trip Action	Get/Set	0, 0, 7	UINT	192
2	200	Alarm Action	Get/Set	0, 0, 7	UINT	193
4	201	Trip Delay	Get/Set	5, 1, 100	REAL	194/195
6	202	Alarm Delay	Get/Set	2, 1, 100	REAL	196/197
7	203	Trip Count	Get		UINT	1143

Class 0x64, Instance 9 – Phase Reverse (I)

Attribute Number	DeviceNet Parameter	Attribute Name	Services	Default, Minimum, Maximum	Data Type	Comm Register
1	204	Trip Action	Get/Set	0, 0, 7	UINT	198
2	205	Alarm Action	Get/Set	0, 0, 7	UINT	199
4	206	Trip Delay	Get/Set	5, 1, 100	REAL	200/201
6	207	Alarm Delay	Get/Set	2, 1, 100	REAL	202/203
7	208	Trip Count	Get		UINT	1144

Class 0x64, Instance 0x0A – Unbalance (V)

Attribute Number	DeviceNet Parameter	Attribute Name	Services	Default, Minimum, Maximum	Data Type	Comm Register
1	209	Trip Action	Get/Set	1, 0, 7	UINT	214
2	210	Alarm Action	Get/Set	1, 0, 7	UINT	215
3	211	Trip Level	Get/Set	0.25, 0.05, 1	REAL	216/217
4	212	Trip Delay	Get/Set	15, 1, 100	REAL	218/219
5	213	Alarm Level	Get/Set	0.10, 0.05, 1	REAL	220/221
6	214	Alarm Delay	Get/Set	10, 1, 100	REAL	222/223
7	215	Trip Count	Get		UINT	1145

Class 0x64, Instance 0x0B – Phase Loss (V)

Attribute Number	DeviceNet Parameter	Attribute Name	Services	Default, Minimum, Maximum	Data Type	Comm Register
1	216	Trip Action	Get/Set	0, 0, 7	UINT	224
2	217	Alarm Action	Get/Set	0, 0, 7	UINT	225
4	218	Trip Delay	Get/Set	5, 1, 100	REAL	226/227
6	219	Alarm Delay	Get/Set	2, 1, 100	REAL	228/229
7	220	Trip Count	Get		UINT	1146

Class 0x64, Instance 0x0C – Phase Reverse (V)

Attribute Number	DeviceNet Parameter	Attribute Name	Services	Default, Minimum, Maximum	Data Type	Comm Register
1	221	Trip Action	Get/Set	0, 0, 7	UINT	234
2	222	Alarm Action	Get/Set	0, 0, 7	UINT	235
4	223	Trip Delay	Get/Set	5, 1, 100	REAL	236/237
6	224	Alarm Delay	Get/Set	2, 1, 100	REAL	238/239
7	225	Trip Count	Get		UINT	1147

Class 0x64, Instance 0x0D - Undervoltage

Attribute Number	DeviceNet Parameter	Attribute Name	Services	Default, Minimum, Maximum	Data Type	Comm Register
1	226	Trip Action	Get/Set	0, 0, 7	UINT	242
2	227	Alarm Action	Get/Set	0, 0, 7	UINT	243
3	228	Trip Level	Get/Set	0.7, 0.5, 1	REAL	244/245
4	229	Trip Delay	Get/Set	5, 1, 500	REAL	246/247
5	230	Alarm Level	Get/Set	0.8, 0.5, 1	REAL	248/249
6	231	Alarm Delay	Get/Set	5, 1, 500	REAL	250/251
7	232	Trip Count	Get		UINT	1149

Class 0x64, Instance 0x0E - Overvoltage

Attribute Number	DeviceNet Parameter	Attribute Name	Services	Default, Minimum, Maximum	Data Type	Comm Register
1	233	Trip Action	Get/Set	1, 0, 7	UINT	254
2	234	Alarm Action	Get/Set	1, 0, 7	UINT	255
3	235	Trip Level	Get/Set	1.2, 1, 1.4	REAL	256/257
4	236	Trip Delay	Get/Set	5, 1, 500	REAL	258/259
5	237	Alarm Level	Get/Set	1.1, 1, 1.4	REAL	260/261
6	238	Alarm Delay	Get/Set	5, 1, 500	REAL	262/263
7	239	Trip Count	Get		UINT	1148

Class 0x64, Instance 0x0F - Underfrequency

Attribute Number	DeviceNet Parameter	Attribute Name	Services	Default, Minimum, Maximum	Data Type	Comm Register
1	240	Trip Action	Get/Set	0, 0, 7	UINT	270
2	241	Alarm Action	Get/Set	0, 0, 7	UINT	271
3	242	Trip Level	Get/Set	45, 30, 80	REAL	272/273
4	243	Trip Delay	Get/Set	5, 1, 500	REAL	274/275
5	244	Alarm Level	Get/Set	48, 30, 80	REAL	276/277
6	245	Alarm Delay	Get/Set	1, 1, 500	REAL	278/279
7	246	Trip Count	Get		UINT	1150

Class 0x64, Instance 0x10 - Overfrequency

Attribute Number	DeviceNet Parameter	Attribute Name	Services	Default, Minimum, Maximum	Data Type	Comm Register
1	247	Trip Action	Get/Set	0, 0, 7	UINT	280
2	248	Alarm Action	Get/Set	0, 0, 7	UINT	281
3	249	Trip Level	Get/Set	65, 30, 80	REAL	282/283
4	250	Trip Delay	Get/Set	5, 1, 500	REAL	284/285
5	251	Alarm Level	Get/Set	62, 30, 80	REAL	286/287
6	252	Alarm Delay	Get/Set	1, 1, 500	REAL	288/289
7	253	Trip Count	Get		UINT	1151

Class 0x64, Instance 0x11 - Power Factor Lag

Attribute Number	DeviceNet Parameter	Attribute Name	Services	Default, Minimum, Maximum	Data Type	Comm Register
1	254	Trip Action	Get/Set	0, 0, 7	UINT	294
2	255	Alarm Action	Get/Set	0, 0, 7	UINT	295
3	256	Trip Level	Get/Set	0.8, 0.5, 1	REAL	296/297
4	257	Trip Delay	Get/Set	5, 1, 500	REAL	298/299
5	258	Alarm Level	Get/Set	0.9, 0.5, 1	REAL	300/301
6	259	Alarm Delay	Get/Set	10, 1, 500	REAL	302/303
7	260	Trip Count	Get		UINT	1152

Class 0x64, Instance 0x12 - Power Factor Lead

Attribute Number	DeviceNet Parameter	Attribute Name	Services	Default, Minimum, Maximum	Data Type	Comm Register
1	261	Trip Action	Get/Set	0, 0, 7	UINT	304
2	262	Alarm Action	Get/Set	0, 0, 7	UINT	305
3	263	Trip Level	Get/Set	0.8, 0.5, 1	REAL	306/307
4	264	Trip Delay	Get/Set	5, 1, 500	REAL	308/309
5	265	Alarm Level	Get/Set	0.9, 0.5, 1	REAL	310/311
6	266	Alarm Delay	Get/Set	10, 1, 500	REAL	312/313
7	267	Trip Count	Get		UINT	1153

Class 0x64, Instance 0x13 – PTC Temperature

Attribute Number	DeviceNet Parameter	Attribute Name	Services	Default, Minimum, Maximum	Data Type	Comm Register
1	268	Trip Action	Get/Set	0, 0, 7	UINT	324
2	269	Alarm Action	Get/Set	0, 0, 7	UINT	325
7	270	Trip Count	Get		UINT	1157

Class 0x64, Instance 0x14 - Reversepower

Attribute Number	DeviceNet Parameter	Attribute Name	Services	Default, Minimum, Maximum	Data Type	Comm Register
1	271	Trip Action	Get/Set	0, 0, 7	UINT	204
2	272	Alarm Action	Get/Set	0, 0, 7	UINT	205
3	273	Trip Level	Get/Set	0.1, 0.1, 1	REAL	206/207
4	274	Trip Delay	Get/Set	5, 0.5, 500	REAL	208/209
5	275	Alarm Level	Get/Set	0.1, 0.1, 1	REAL	210/211
6	276	Alarm Delay	Get/Set	1, 0.5, 500	REAL	212/213
7	277	Trip Count	Get		UINT	1190

3.9 Inverse Curve Class 0x65

Inverse Curve Object Class Services

Get_Attribute_Single: Returns contents of specified attribute.

Inverse Curve Class 0x65, Instance 0 Attributes

Attribute Number	Attribute Name	Services	Description	Default, Minimum, Maximum	Data Type
1	Revision	Get	Revision of this object.	1	UINT
2	Max Instance	Get	Maximum number of instances.	4	UINT

Inverse Curve Object Instance Services

Get_Attribute_Single: Returns contents of specified attribute.

Set_Attribute_Single: Modifies specified attribute

The inverse curve class consists of five attributes.

Attribute 1 - Trip Action

Specifies the action to take on a trip.

0 = Disable Trip
1 = Trip1
2 = Trip2
3 = Trip3
4 = Trip1 & Trip2
5 = Trip1 & Trip3
6 = Trip1 & Trip2 & Trip3
7 = Trip2 & Trip3

Attribute 2 – Curve

0 = IEC Normal Inverse A
1 = IEC Very Inverse B
2 = IEC Extreme Inverse C
3 = IEC Short Inverse A
4 = IEC Long Inverse B
5 = IEEE Moderate Inverse
6 = IEEE Very Inverse
7 = IEEE Extreme Inverse

Attribute 3 – Multiplier

Adjusts the trip time for the selected curve type.

Attribute 4 – Pickup

Sets the threshold current in multiples of CT rating.

Attribute 5 – Trip Count

Trip counter for the set point.

For curve formulas, see the FPS product manual.

Class 0x65, Instance 1 – Phase Inverse, Group 1

Attribute Number	DeviceNet Parameter	Attribute Name	Services	Default, Minimum, Maximum	Data Type	Comm Register
1	285	Trip Action	Get/Set	1, 0, 7	UINT	50
2	286	Curve	Get/Set	0, 0, 7	UINT	51
3	287	Multiplier	Get/Set	0.2, 0.05, 1	REAL	52/53
4	288	Pickup	Get/Set	2, 0.1, 10	REAL	54/55
5	289	Trip Count	Get		UINT	1132

Class 0x65, Instance 2 – Phase Inverse, Group 2

Attribute Number	DeviceNet Parameter	Attribute Name	Services	Default, Minimum, Maximum	Data Type	Comm Register
1	290	Trip Action	Get/Set	1, 0, 7	UINT	60
2	291	Curve	Get/Set	0, 0, 7	UINT	61
3	292	Multiplier	Get/Set	0.2, 0.05, 1	REAL	62/63
4	293	Pickup	Get/Set	2, 0.1, 10	REAL	64/65
5	294	Trip Count	Get		UINT	1133

Class 0x65, Instance 3 – $3I_0$ Inverse, Group 1

Attribute Number	DeviceNet Parameter	Attribute Name	Services	Default, Minimum, Maximum	Data Type	Comm Register
1	295	Trip Action	Get/Set	1, 0, 7	UINT	100
2	296	Curve	Get/Set	0, 0, 7	UINT	101
3	297	Multiplier	Get/Set	0.2, 0.05, 1	REAL	102/103
4	298	Pickup	Get/Set	2, 0.1, 10	REAL	104/105
5	299	Trip Count	Get		UINT	1136

Class 0x65, Instance 4 – $3I_0$ Inverse, Group 2

Attribute Number	DeviceNet Parameter	Attribute Name	Services	Default, Minimum, Maximum	Data Type	Comm Register
1	300	Trip Action	Get/Set	1, 0, 7	UINT	110
2	301	Curve	Get/Set	0, 0, 7	UINT	111
3	302	Multiplier	Get/Set	0.2, 0.05, 1	REAL	112/113
4	303	Pickup	Get/Set	2, 0.1, 10	REAL	114/115
5	304	Trip Count	Get		UINT	1137

3.10 Digital Input Class 0x66

Digital Input Object Class Services

Get_Attribute_Single: Returns contents of specified attribute.

Digital Input Class (0x66), Instance (0) Attributes

Attribute Number	Attribute Name	Services	Description	Default, Minimum, Maximum	Data Type
1	Revision	Get	Revision of this object.	1	UINT
2	Max Instance	Get	Maximum number of instances.	7	UINT

Digital Input Object Instance Services

Get_Attribute_Single: Returns contents of specified attribute.

Set_Attribute_Single: Modifies specified attribute.

The digital-input class consists of 5 attributes.

Attribute 1 - Function

Selects the function of the digital input.

0 = None
1 = Group 2 Select
2 = Local Control Select
3 = Permissive
4 = 3-Wire Close
5 = 2-Wire Close
6 = 3-Wire Close Local
7 = 2-Wire Close Local
8 = 52a Close Status
9 = 52b Open Status
10 = Reserved 10
11 = Reserved 11
12 = Reserved 12
13 = Interlock
14 = Trip1
15 = Reset
16 = Positive-Edge Trigger
17 = Negative-Edge Trigger
18 = Transition Trigger

Attribute 2 - Bypass Enable/Disable

Attribute applies when the input function is trip. When enabled, the input is bypassed for the time defined by the Bypass Delay when a breaker or contactor is closed.0 = Enable, 1 = Disable

Attribute 3 - Bypass Delay

Defines the Trip bypass time duration on close.

Attribute 4 - Trip Delay

Applies only to the trip function.

Attribute 5 - Trip Count

The trip counter only applies to the trip function.

Class 0x66, Instance 1 - Input 1

Attribute Number	DeviceNet Parameter	Attribute Name	Services	Default, Minimum, Maximum	Data Type	Comm Register
1	315	Function	Get/Set	0, 0, 18	UINT	540
2	316	Bypass Enable/Disable	Get/Set	1, 0, 1	UINT	541
3	317	Bypass Delay	Get/Set	5, 0.5, 100	REAL	542/543
4	318	Trip Delay	Get/Set	0.1, 0.01, 100	REAL	544/545
5	319	Trip Counter	Get		UINT	1158

Class 0x66, Instance 2 - Input 2

Attribute Number	DeviceNet Parameter	Attribute Name	Services	Default, Minimum, Maximum	Data Type	Comm Register
1	320	Function	Get/Set	0, 0, 18	UINT	550
2	321	Bypass Enable/Disable	Get/Set	1, 0, 1	UINT	551
3	322	Bypass Delay	Get/Set	5, 0.5, 100	REAL	552/553
4	323	Trip Delay	Get/Set	0.1, 0.01, 100	REAL	554/555
5	324	Trip Counter	Get		UINT	1159

Class 0x66, Instance 3 - Input 3

Attribute Number	DeviceNet Parameter	Attribute Name	Services	Default, Minimum, Maximum	Data Type	Comm Register
1	325	Function	Get/Set	0, 0, 18	UINT	560
2	326	Bypass Enable/Disable	Get/Set	1, 0, 1	UINT	561
3	327	Bypass Delay	Get/Set	5, 0.5, 100	REAL	562/563
4	328	Trip Delay	Get/Set	0.1, 0.01, 100	REAL	564/565
5	329	Trip Counter	Get		UINT	1160

Class 0x66, Instance 4 - Input 4

Attribute Number	DeviceNet Parameter	Attribute Name	Services	Default, Minimum, Maximum	Data Type	Comm Register
1	330	Function	Get/Set	0, 0, 18	UINT	570
2	331	Bypass Enable/Disable	Get/Set	1, 0, 1	UINT	571
3	332	Bypass Delay	Get/Set	5, 0.5, 100	REAL	572/573
4	333	Trip Delay	Get/Set	0.1, 0.01, 100	REAL	574/575
5	334	Trip Counter	Get		UINT	1161

Class 0x66, Instance 5 - Input 5

Attribute Number	DeviceNet Parameter	Attribute Name	Services	Default, Minimum, Maximum	Data Type	Comm Register
1	335	Function	Get/Set	0, 0, 18	UINT	580
2	336	Bypass Enable/Disable	Get/Set	1, 0, 1	UINT	581
3	337	Bypass Delay	Get/Set	5, 0.5, 100	REAL	582/583
4	338	Trip Delay	Get/Set	0.1, 0.01, 100	REAL	584/585
5	339	Trip Counter	Get		UINT	1162

Class 0x66, Instance 6 - Input 6

Attribute Number	DeviceNet Parameter	Attribute Name	Services	Default, Minimum, Maximum	Data Type	Comm Register
1	340	Function	Get/Set	0, 0, 18	UINT	590
2	341	Bypass Enable/Disable	Get/Set	1, 0, 1	UINT	591
3	342	Bypass Delay	Get/Set	5, 0.5, 100	REAL	592/593
4	343	Trip Delay	Get/Set	0.1, 0.01, 100	REAL	594/595
5	344	Trip Counter	Get		UINT	1163

Class 0x66, Instance 7 - Input 7

Attribute Number	DeviceNet Parameter	Attribute Name	Services	Default, Minimum, Maximum	Data Type	Comm Register
1	345	Function	Get/Set	0, 0, 18	UINT	600
2	346	Bypass Enable/Disable	Get/Set	1, 0, 1	UINT	601
3	347	Bypass Delay	Get/Set	5, 0.5, 100	REAL	602/603
4	348	Trip Delay	Get/Set	0.1, 0.01, 100	REAL	604/605
5	349	Trip Counter	Get		UINT	1164

3.11 Analog I/O Class 0x67

Analog I/O Object Instance Services

Get_Attribute_Single: Returns contents of specified attribute.

Analog I/O Class (0x67), Instance (0) Attributes

Attribute Number	Attribute Name	Services	Description	Default, Minimum, Maximum	Data Type
1	Revision	Get	Revision of this object.	1	UINT
2	Max Instance	Get	Maximum number of instances.	1	UINT

Analog I/O Object Instance Services

Get_Attribute_Single: Returns contents of specified attribute.

Set_Attribute_Single: Modifies specified attribute.

Analog I/O Class (0x67), Instance (1) Attributes

Attribute Number	Param	Attribute Name	Services	Description	Default, Minimum, Maximum	Data Type	Comm Register
1	350	Analog In Type	Get/Set	Defines the analog-input type: 0 = Metering 1 = Protection (Trip1, Alarm1 Enabled)	0, 0, 3	UINT	630
2	351	Trip Action	Get/Set	Sets trip action for High and Low Trips.	0, 0, 7	UINT	631
3	352	Alarm Action	Get/Set	Sets alarm actions for High and Low Alarms.	0, 0, 7	UINT	632
4	353	High Trip	Get/Set	Sets high trip level for generic input type. (mA)	16, 0.1, 20	REAL	633/634
5	354	Low Trip	Get Set	Sets low trip level for generic input type. (mA)	7, 0.1, 20	REAL	635/636
6	355	Trip Delay	Get/Set	Applies to generic type. (s)	5, 0.01, 100	REAL	637/638
7	356	High Alarm	Get/Set	Sets high alarm level for generic input type. (mA)	14, 0.1, 20	REAL	639/640
8	357	Low Alarm	Get/Set	Sets low alarm level for generic input type. (mA)	9, 0.1, 20	REAL	641/642

Analog I/O Class (0x67), Instance (1) Attributes (continued)

Attribute Number	Param	Attribute Name	Services	Description	Default, Minimum, Maximum	Data Type	Comm Register
9	358	Alarm Delay	Get/Set	Applies to generic type (s)	1, 0.01, 100	REAL	643/644
10 (0x0A)	359	Out Param	Get/Set	Specifies the analog output parameter: 0 = Phase Current 1 = Earth Leakage 2 = Thermal Capacity 3 = Max Group A RTD 4 = Max Group B RTD 5 = Max Group C RTD 6 = Max Ambient RTD 7 = Voltage 8 = Unbalance (I) 9 = Power Factor 10 = Real Power 11 = Reactive Power 12 = Apparent Power 13 = Zero (4 mA) 14 = Full Scale (20 mA)	0, 0, 14	UINT	650
11 (0x0B)	360	High Trips	Get	Input-High Trip Count		UINT	1155
12 (0x0C)	361	Low Trips	Get	Input-Low Trip Count		UINT	1156

3.12 RTD MODULE CLASS 0x68

RTD Module Object Class Services

Get_Attribute_Single: Returns contents of specified attribute.
Set_Attribute_Single: Modifies specified attribute.

Class 0x68, Instance 0, Attributes

ATTRIBUTE NUMBER	PARAM	ATTRIBUTE NAME	SERVICES	DESCRIPTION	DEFAULT, MINIMUM, MAXIMUM	DATA TYPE	COMM REGISTER
1		Revision Number	Get	Revision number of this class.	1	UINT	
2		Max Instance	Get	Maximum Number of RTD Modules	3	UINT	
100 (0x64)	365	Modules Used	Get/Set	Specifies the Number of RTD Modules Used	0, 0, 1	UINT	328
101 (0x65)	366	Sensor Trip Action	Get/Set	Specifies trip action to take on a sensor error. 0 = Disable Trips 1 = Trip1 2 = Trip2 3 = Trip3 4 = Trip1 & Trip2 5 = Trip1 & Trip3 6 = Trip1 & Trip2 & Trip3 7 = Trip2 & Trip3 A Trip initiates an OPEN when a CB Control is enabled.	0, 0, 7	UINT	331
102 (0x66)	367	Sensor Alarm Action	Get/Set	Specifies alarm action to take on a sensor error. 0 = Disable Alarms 1 = Alarm1 2 = Alarm2 3 = Alarm3 4 = Alarm1 & Alarm2 5 = Alarm1 & Alarm3 6 = Alarm1 & Alarm2 & Alarm3 7 = Alarm2 & Alarm3	1, 0, 7	UINT	332
103 (0x67)	368	Module Error Trip Action	Get/Set	Specifies trip action to take on a module error. Action list is the same as Attribute 9.	0, 0, 7	UINT	329
104 (0x68)	369	Module Error Alarm Action	Get/Set	Specifies alarm action to take on a module error. Action list is the same as Attribute A.	1, 0, 7	UINT	330
105 (0x69)	370	Module1 Comm Trip Count	Get	Number of module1 communication-error trips.		UINT	1173
106 (0x6A)	371	Reserved					
107 (0x6B)	372	Reserved					
108 (0x6C)	373	Sensor Trip Count	Get	Number of RTD sensor trips.		UINT	1174
109 (0x6D)	374	Reserved					
110 (0x6E)	375	Reserved					
111 (0x6F)	376	Reserved					
112 (0x70)	377	Max GrpA Temp	Get	Max Group A Temperature (°C)		REAL	934/935
113 (0x71)	378	Max GrpB Temp	Get	Max Group B Temperature (°C)		REAL	936/937
114 (0x72)	379	Max GrpC Temp	Get	Max Group C Temperature (°C)		REAL	938/939
115 (0x73)	380	Max Amb Temp	Get	Max Ambient Temperature (°C)		REAL	940/941
116 (0x74)	381	Min GrpA Temp	Get	Min Group A Temperature (°C)		REAL	942/943
117 (0x75)	382	Min GrpB Temp	Get	Min Group B Temperature (°C)		REAL	944/945
118 (0x76)	383	Min GrpC Temp	Get	Min Group C Temperature (°C)		REAL	946/947
119 (0x77)	384	Min Ambient Temp	Get	Min Ambient Temperature (°C)		REAL	948/949

Class 0x68, Instance 0, Attributes (continued)

Attribute Number	Param	Attribute Name	Services	Description	Default, Minimum, Maximum	Data Type	Comm Register
120 (0x78)	385	UTemp Trip	Get/Set	Trip Level Selection	4, 0, 8	UINT	314
121 (0x79)	386	UTemp Alarm	Get/Set	Alarm Level Selection	4, 0, 8	UINT	315
122 (0x7A)	387	UTemp Trip Action	Get/Set	Trip Action	0, 0, 7	UINT	316
123 (0x7B)	388	UTemp Alarm Action	Get/Set	Trip Action	0, 0, 7	UINT	317
124 (0x7C)	389	UTemp Trip Count	Get	Undertemperature Trip Count		UINT	1191

RTD Module Object Instance Services

Get_Attribute_Single: Returns contents of specified attribute.

Set_Attribute_Single: Modifies specified attribute.

Object Instance Attributes 1 to 8 define the RTD type. Selecting an RTD will enable trip and alarm set points. The trip action is fixed as Trip1 and the alarm action is fixed as Alarm1.

0 = RTD Disabled
1 = Platinum 100 ohm
2 = Nickel 100 ohm
3 = Nickel 120 ohm
4 = Copper 10 ohm

Object Instance Attributes 0x09 to 0x10 define the RTD function.

0 = Stator
1 = Bearing
2 = Load
3 = Ambient

Object Instance Attributes 0x11 to 0x20 define the trip and alarm settings in degrees C. The trip action is fixed as Trip1 and the alarm action is fixed as Alarm1.

Object Instance Attributes 0x21 to 0x28 define an 18-character name.

Object Instance Attributes 0x29 to 0x30 are temperature readings.

Object Instance Attributes 0x31 to 0x38 are the trip counters for each of the RTD's

Class 0x68, Instance 1

Attribute Number	DeviceNet Parameter	Attribute Name	Services	Default, Minimum, Maximum	Data Type	Comm Register
1	390	RTD #1 Type	Get/Set	0, 0, 4	UINT	336
2	391	RTD #2 Type	Get/Set	0, 0, 4	UINT	337
3	392	RTD #3 Type	Get/Set	0, 0, 4	UINT	338
4	393	RTD #4 Type	Get/Set	0, 0, 4	UINT	339
5	394	RTD #5 Type	Get/Set	0, 0, 4	UINT	340
6	395	RTD #6 Type	Get/Set	0, 0, 4	UINT	341
7	396	RTD #7 Type	Get/Set	0, 0, 4	UINT	342
8	397	RTD #8 Type	Get/Set	0, 0, 4	UINT	343
9	398	RTD #1 Function	Get/Set	0, 0, 3	UINT	344
10 (0x0A)	399	RTD #2 Function	Get/Set	0, 0, 3	UINT	345
11 (0x0B)	400	RTD #3 Function	Get/Set	0, 0, 3	UINT	346
12 (0x0C)	401	RTD #4 Function	Get/Set	0, 0, 3	UINT	347
13 (0x0D)	402	RTD #5 Function	Get/Set	0, 0, 3	UINT	348
14 (0x0E)	403	RTD #6 Function	Get/Set	0, 0, 3	UINT	349
15 (0x0F)	404	RTD #7 Function	Get/Set	0, 0, 3	UINT	350
16 (0x10)	405	RTD #8 Function	Get/Set	0, 0, 3	UINT	351
17 (0x11)	406	RTD #1 Trip Level	Get/Set	130, 40, 200	REAL	352/353
18 (0x12)	407	RTD #1 Alarm Level	Get/Set	110, 40, 200	REAL	354/355
19 (0x13)	408	RTD #2 Trip Level	Get/Set	130, 40, 200	REAL	356/357
20 (0x14)	409	RTD #2 Alarm Level	Get/Set	110, 40, 200	REAL	358/359
21 (0x15)	410	RTD #3 Trip Level	Get/Set	130, 40, 200	REAL	360/361
22 (0x16)	411	RTD #3 Alarm Level	Get/Set	110, 40, 200	REAL	362/363
23 (0x17)	412	RTD #4 Trip Level	Get/Set	130, 40, 200	REAL	364/365
24 (0x18)	413	RTD #4 Alarm Level	Get/Set	110, 40, 200	REAL	366/367
25 (0x19)	414	RTD #5 Trip Level	Get/Set	130, 40, 200	REAL	368/369
26 (0x1A)	415	RTD #5 Alarm Level	Get/Set	110, 40, 200	REAL	370/371
27 (0x1B)	416	RTD #6 Trip Level	Get/Set	130, 40, 200	REAL	372/373
28 (0x1C)	417	RTD #6 Alarm Level	Get/Set	110, 40, 200	REAL	374/375
29 (0x1D)	418	RTD #7 Trip Level	Get/Set	130, 40, 200	REAL	376/377
30 (0x1E)	419	RTD #7 Alarm Level	Get/Set	110, 40, 200	REAL	378/379
31 (0x1F)	420	RTD #8 Trip Level	Get/Set	130, 40, 200	REAL	380/381
32 (0x20)	421	RTD #8 Alarm Level	Get/Set	110, 40, 200	REAL	382/383
33 (0x21)	422	RTD #1 Name	Get/Set	RTD M1 #1	SHORT_ STRING	384..393
34 (0x22)	423	RTD #2 Name	Get/Set	RTD M1 #2	SHORT_ STRING	394..403
35 (0x23)	424	RTD #3 Name	Get/Set	RTD M1 #3	SHORT_ STRING	404..413
36 (0x24)	425	RTD #4Name	Get/Set	RTD M1 #4	SHORT_ STRING	414..423
37 (0x25)	426	RTD #5 Name	Get/Set	RTD M1 #5	SHORT_ STRING	424..433
38 (0x26)	427	RTD #6 Name	Get/Set	RTD M1 #6	SHORT_ STRING	434..443
39 (0x27)	428	RTD #7 Name	Get/Set	RTD M1 #7	SHORT_ STRING	444..453
40 (0x28)	429	RTD #8 Name	Get/Set	RTD M1 #8	SHORT_ STRING	454..463
41 (0x29)	430	RTD #1 Temp RDG	Get		REAL	918/919
42 (0x2A)	431	RTD #2 Temp RDG	Get		REAL	920/921
43 (0x2B)	432	RTD #3 Temp RDG	Get		REAL	922/923
44 (0x2C)	433	RTD #4 Temp RDG	Get		REAL	924/925
45 (0x2D)	434	RTD #5 Temp RDG	Get		REAL	926/927
46 (0x2E)	435	RTD #6 Temp RDG	Get		REAL	928/929
47 (0x2F)	436	RTD #7 Temp RDG	Get		REAL	930/931
48 (0x30)	437	RTD #8 Temp RDG	Get		REAL	932/933

Class 0x68, Instance 1 (continued)

Attribute Number	DeviceNet Parameter	Attribute Name	Services	Default, Minimum, Maximum	Data Type	Comm Register
49 (0x31)	438	RTD #1 Trip Cntr	Get		UINT	1165
50 (0x32)	439	RTD #2 Trip Cntr	Get		UINT	1166
51 (0x33)	440	RTD #3 Trip Cntr	Get		UINT	1167
52 (0x34)	441	RTD #4 Trip Cntr	Get		UINT	1168
53 (0x35)	442	RTD #5 Trip Cntr	Get		UINT	1169
54 (0x36)	443	RTD #6 Trip Cntr	Get		UINT	1170
55 (0x37)	444	RTD #7 Trip Cntr	Get		UINT	1171
56 (0x38)	445	RTD #8 Trip Cntr	Get		UINT	1172

3.13 RTC Class 0x69

RTC Object Class Services

Get_Attribute_Single: Returns contents of specified attribute.

RTC Class (0x69), Instance (0) Attributes

Attribute Number	Attribute Name	Services	Description	Default, Minimum, Maximum	Data Type
1	Revision	Get	Revision of this object.	1	UINT
2	Max Instance	Get	Maximum number of instances.	1	UINT

RTC Object Class Services

Get_Attribute_Single: Returns contents of specified attribute.

Set_Attribute_Single: Modifies specified attribute.

RTC Class (0x69), Instance (1) Attributes

Attribute Number	Param	Attribute Name	Services	Description	Default, Minimum, Maximum	Data Type	Comm Register
1	446	IRIG Hrs Offset	Get/Set	RTC Hrs = IRIG Hrs + IRIG Hr Offset	0, 0, 30	REAL	726/727
2	447	IRIG Min Offset	Get/Set	RTC Min = IRIG Min + IRIG Min Offset	0, 0, 23	REAL	724/725
3	448	RTC Date	Get	Number of Days Since 1972-01-01		DATE	720/721
4	449	RTC Time	Get	Number of Milliseconds Since 00:00:00:00.000	0, 0, 86399999	TIME OF DAY	722/723
5	450	RTC Set	Get/Set (1)	String Used to Set the Date and Time YY/MM/DD-HH:MM:SS		SHORT_ STRING	728..737

(1) Time value is not activated until a SET RTC command is issued using Class 0x29, Instance 1, Attribute 0x64.

3.14 User Register Class 0x6A

This object defines the communication registers that generate the data for Assembly Class 4, Instance 0x67, Attribute 3. Register values are defined in Appendix E of the Main Product Manual. Each register in Appendix E defines a 16-bit value. For 32-bit float type (DeviceNet REAL), only the first register of the pair needs too be entered. For example, to configure an assembly to read the first four RTD temperatures in RTD Module 1, enter register numbers 902, 904, 906, 908. The first 16 bytes of the assembly will contain the RTD data and the remaining bytes do not contain any valid data. Register definitions resulting in more than 64 bytes of data will be ignored.

User Register Object Class Services

Get_Attribute_Single: Returns contents of specified attribute.

User Register Class (0x6A), Instance (0) Attributes

Attribute Number	Attribute Name	Services	Description	Default, Minimum, Maximum	Data Type
1	Revision	Get	Revision of this object.	1	UINT
2	Max Instance	Get	Maximum number of instances.	1	UINT

User Register Object Instance Services

Get_Attribute_Single: Returns contents of specified attribute.

Set_Attribute_Single: Modifies specified attribute.

User Register Class (0x6A), Instance (1) Attributes

Attribute Number	Param	Attribute Name	Services	Description	Default, Minimum, Maximum	Data Type	Comm Register
1	451	Register 0	Get/Set	User Register Value	0, 0, 1189	UINT	1400
2	452	Register 1	Get/Set	User Register Value	0, 0, 1189	UINT	1401
3	453	Register 2	Get/Set	User Register Value	0, 0, 1189	UINT	1402
4	454	Register 3	Get/Set	User Register Value	0, 0, 1189	UINT	1403
5	455	Register 4	Get/Set	User Register Value	0, 0, 1189	UINT	1404
6	456	Register 5	Get/Set	User Register Value	0, 0, 1189	UINT	1405
7	457	Register 6	Get/Set	User Register Value	0, 0, 1189	UINT	1406
8	458	Register 7	Get/Set	User Register Value	0, 0, 1189	UINT	1407
9	459	Register 8	Get/Set	User Register Value	0, 0, 1189	UINT	1408
10	460	Register 9	Get/Set	User Register Value	0, 0, 1189	UINT	1409
11	461	Register 10	Get/Set	User Register Value	0, 0, 1189	UINT	1410
12	462	Register 11	Get/Set	User Register Value	0, 0, 1189	UINT	1411
13	463	Register 12	Get/Set	User Register Value	0, 0, 1189	UINT	1412
14	464	Register 13	Get/Set	User Register Value	0, 0, 1189	UINT	1413
15	465	Register 14	Get/Set	User Register Value	0, 0, 1189	UINT	1414
16	466	Register 15	Get/Set	User Register Value	0, 0, 1189	UINT	1415
17	467	Register 16	Get/Set	User Register Value	0, 0, 1189	UINT	1416
18	468	Register 17	Get/Set	User Register Value	0, 0, 1189	UINT	1417
19	469	Register 18	Get/Set	User Register Value	0, 0, 1189	UINT	1418
20	470	Register 19	Get/Set	User Register Value	0, 0, 1189	UINT	1419
21	471	Register 20	Get/Set	User Register Value	0, 0, 1189	UINT	1420
22	472	Register 21	Get/Set	User Register Value	0, 0, 1189	UINT	1421
23	473	Register 22	Get/Set	User Register Value	0, 0, 1189	UINT	1422
24	474	Register 23	Get/Set	User Register Value	0, 0, 1189	UINT	1423
25	475	Register 24	Get/Set	User Register Value	0, 0, 1189	UINT	1424
26	476	Register 25	Get/Set	User Register Value	0, 0, 1189	UINT	1425
27	477	Register 26	Get/Set	User Register Value	0, 0, 1189	UINT	1426
28	478	Register 27	Get/Set	User Register Value	0, 0, 1189	UINT	1427
29	479	Register 28	Get/Set	User Register Value	0, 0, 1189	UINT	1428
30	480	Register 29	Get/Set	User Register Value	0, 0, 1189	UINT	1429
31	481	Register 30	Get/Set	User Register Value	0, 0, 1189	UINT	1430
32	482	Register 31	Get/Set	User Register Value	0, 0, 1189	UINT	1431

3.15 Data Logging Class 0x6B

This object is used to access one of 64 data-logging records. The Record Selector value defines the record that is displayed. Record Head indicates the record number for the latest record.

Data Logging Object Class Services

Get_Attribute_Single: Returns contents of specified attribute.

Data Logging Class (0x6B), Instance (0) Attributes

Attribute Number	Attribute Name	Services	Description	Default, Minimum, Maximum	Data Type
1	Revision	Get	Revision of this object.	1	UINT
2	Max Instance	Get	Maximum number of instances.	1	UINT

Data Logging Object Instance Services

Get_Attribute_Single: Returns contents of specified attribute.

Set_Attribute_Single: Modifies specified attribute.

Data Logging Class (0x6B), Instance (1) Attributes

Attribute Number	Param	Attribute Name	Services	Description	Default, Minimum, Maximum	Data Type	Comm Register
1	485	Record Count	Get	Number of captured records since the last time the event records were cleared.	0, 0, 65535	UINT	980
2	486	Record Head	Get	Points to next record. Latest record at Record Head minus 1.	0, 0, 63	UINT	981
3	487	Record Selector	Get/Set	Selects the record for which the data is displayed in this instance.	0, 0, 63	UINT	982
4	488	Record Date	Get	The date when the record was captured.	0, 0, 65535	DATE	983/984
5	489	Record Time	Get	Time-of-Day the record was captured.	0, 0, 86399999	TOD	985/986
6	490	Record Type	Get	Specifies the trigger source. 0= Record Empty 1= Trip Record 2= + Edge Record 3= – Edge Record 4= $^{+}/_{-}$ Edge Record	0, 0, 4	UINT	987
7	491	Trip Code	Get	See Main Product Manual Appendix F T27 for a list of trip codes. 255 = No Trip or Alarm	0, 0, 255	UINT	988
8	492	IA	Get	Phase A Current (A)		REAL	989/990
9	493	IB	Get	Phase B Current (A)		REAL	991/992
10 (0x0A)	494	IC	Get	Phase C Current (A)		REAL	993/994
11 (0x0B)	495	I_{CT}	Get	Ground-Fault Current (A)		REAL	995/996

Data Logging Class (0x6B), Instance (1) Attributes (continued)

Attribute Number	Param	Attribute Name	Services	Description	Default, Minimum, Maximum	Data Type	Comm Register
12 (0x0C)	496	$3I_0$	Get	Calculated Residual		REAL	997/998
13 (0x0D)	497	Vab	Get	Line-to-Line Voltage (kV)		REAL	999/1000
14 (0x0E)	498	Vbc	Get	Line-to-Line Voltage (kV)		REAL	1001/1002
15 (0x0F)	499	Vca	Get	Line-to-Line Voltage (kV)		REAL	1003/1004
16 (0x10)	500	V_a	Get	Line-to-Ground Voltage (kV)		REAL	1005/1006
17 (0x11)	501	V_b	Get	Line-to-Ground Voltage (kV)		REAL	1007/1008
18 (0x12)	502	V_c	Get	Line-to-Ground Voltage (kV)		REAL	1009/1010
19 (0x13)	503	A_{in}	Get	Analog Input		REAL	1011/1012
20 (0x14)	504	Unbalance (I)	Get	Current Unbalance (pu)		REAL	1013/1014
21 (0x15)	505	Unbalance (V)	Get	Current Unbalance (pu)		REAL	1015/1016
22 (0x16)	506	I^2T Used	Get	Used I^2T Overload (pu)		REAL	1017/1018
23 (0x17)	507	Frequency	Get	Frequency in Hz		REAL	1019/1020
24 (0x18)	508	S	Get	Apparent Power (kVA)		REAL	1021/1022
25 (0x19)	509	P	Get	Real Power (kW)		REAL	1023/1024
26 (0x1A)	510	Q	Get	Reactive Power (kVAR)		REAL	1025/1026
27 (0x1B)	511	PF	Get	Power Factor (-1, +1)		REAL	1027/1028
28 (0x1C)	512	M1 RTD1	Get	RTD Temperature Reading (ºC)		REAL	1029/1030
29 (0x1D)	513	M1 RTD2	Get	RTD Temperature Reading (ºC)		REAL	1031/1032
30 (0x1E)	514	M1 RTD3	Get	RTD Temperature Reading (ºC)		REAL	1033/1034
31 (0x1F)	515	M1 RTD4	Get	RTD Temperature Reading (ºC)		REAL	1035/1036
32 (0x2A)	516	M1 RTD5	Get	RTD Temperature Reading (ºC)		REAL	1037/1038
33 (0x21)	517	M1 RTD6	Get	RTD Temperature Reading (ºC)		REAL	1039/1040
34 (0x22)	518	M1 RTD7	Get	RTD Temperature Reading (ºC)		REAL	1041/1042
35 (0x23)	519	M1 RTD8	Get	RTD Temperature Reading (ºC)		REAL	1043/1044

APPENDIX A
FPS DEVICENET EDS FILES

FPS FIRMWARE	EDS FILES	EDS FILE DATE
1.10	2.001	06-25-2013
0.01 to 1.05	1.002	04-20-2011

APPENDIX B
FPS DEVICENET INTERFACE REVISION HISTORY

MANUAL RELEASE DATE	MANUAL REVISION
April 11, 2014	0-A-041114
May 11, 2011	Preliminary 1

MANUAL REVISION HISTORY

REVISION 0-A-041114

Open Retry added to Supervisor Class, Instance 1.
Set Point Class 0x64, Instance 0 Attributes updated.
PTC Temperature and Reversepower added to Class 0x64.
Undertemperature added to Class 0x68.

REVISION PRELIMINARY 1

Initial release.