Littelfuse®

Expertise Applied | Answers Delivered

Water & Wastewater Controls

SymCom
NOW PART OF LITTELFUSE, INC.
MotorSaver
PumpSaver

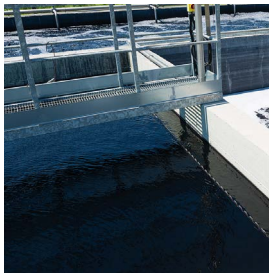

Intrinsically Safe Relays and Controllers

Applying electronic controls in hazardous environments can be difficult. Fortunately, Littelfuse SymCom intrinsically safe relays and controllers are specifically designed to interface controls between hazardous and non-hazardous areas. Intrinsically safe relays limit the energy that is provided to the hazardous area, thus reducing the potential of a spark. We provide several models of intrinsically safe relays and controllers offering distinct output relay configurations for a variety of systems.

One of the most common wastewater lift station configurations is a duplex, pump-down lead-lag system, basically meaning there are two pumps working to remove liquid from a concrete well or pit. In this example, 5 floats are connected to the ISS-105 and used as follows:

- **Lead Float** - When closes, indicates that one pump should turn on and begin pumping. If alternation is enabled on the ISS-105, the pump that started second in the last pumping cycle will turn on first.
- **Lag Float** -When closes, indicates to the ISS-105 that a single pump is not enough to pump the liquid level down and the second pump should turn on for additional pumping capacity.
- **High Alarm Float** - If the liquid level moves above the high alarm float, the 155-105 activates the high alarm and the audible alarm (if applicable) to indicate liquid is coming in faster than the pumps can pump it out.
- **Stop Float** - When the liquid level drops below this float switch, the ISS-105 knows the liquid is at an acceptable level and turns off both pumps.
- **Low Alarm Float** - If the liquid ever drops below this float switch, the ISS-105 activates the low alarm and the audible alarm (if applicable) to indicate the pumps have not shut off and the liquid level is lower than expected. This may be due to the Stop Float being stuck and could lead to pump cavitation.

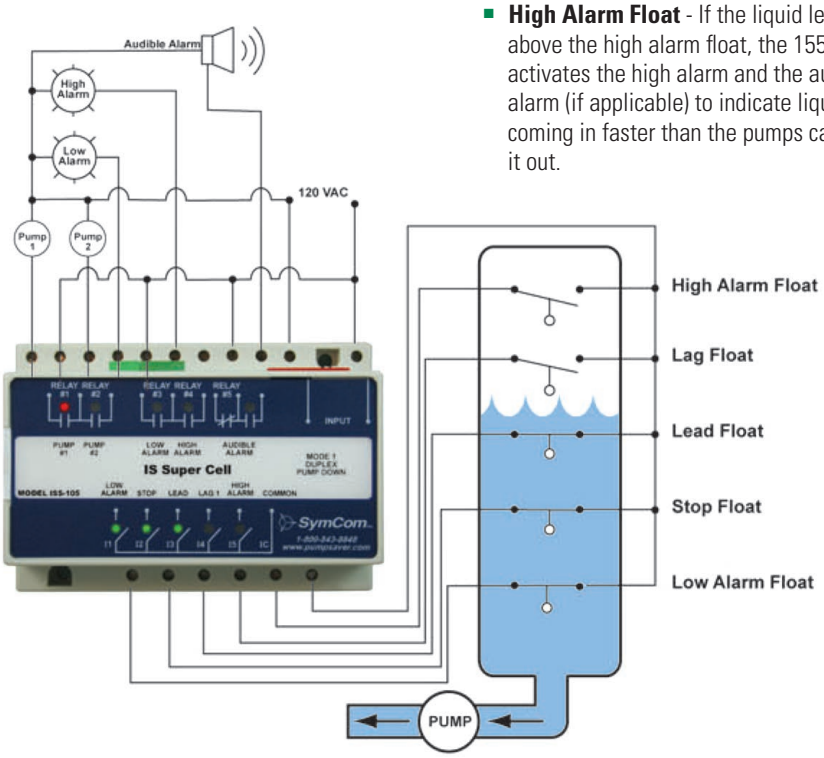

Liquid Level Controls

Littelfuse SymCom's liquid level control relays are used to control conductive liquid pumping operations using either floats or conductance probes. They can be used in pump-up or pump-down applications. In either application, a probe is mounted at the desired tank level while a reference probe or common is mounted in the same manner for nonconductive tanks, or attached to a conductive tank.

When the liquid level control senses a change in the resistance between the probe and reference probe/common it will change state and either fill or drain the tank depending on the specified application.

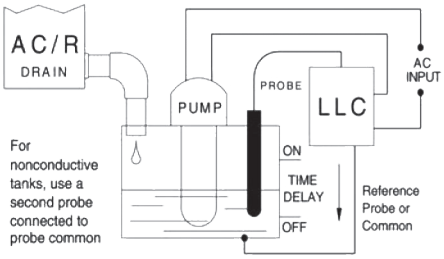

Littelfuse®
Expertise Applied | Answers Delivered

Alarm Controller and Battery Charger

Littelfuse SymCom's ACBC-120 is a dual purpose alarm controller/battery charging unit. When there is a loss of 120VAC power, the ACBC-120's primary function as an alarm controller activates. When this power loss occurs, input power is switched to a 12VDC, lead-acid, rechargeable backup battery and a 12VDC alarm is activated. When 120VAC input is present the alarm circuit can be tested and the unit's secondary function as a 12VDC backup battery charger is activated. The device has the ability to signal low battery voltage if the voltage drops below 10.5VDC. The device can also detect if no battery is present or if the battery is connected backwards. In either of these cases, the ACBC-120 will signal a battery error and will not attempt to charge.

Enhanced Power Monitors

Many pumping applications require advanced power monitoring and control. Littelfuse SymCom enhanced power monitors provide all of the protection and features included with an enhanced overload relay, and are designed specifically to support low horsepower and/or low speed motor applications. This family of enhanced power monitors provides optimal protection for any type of motor or pump.

Voltage/Phase Monitors

Adverse line conditions such as high and low voltage, unbalanced voltage, phase reversal, and phase loss may severely damage equipment. Littelfuse SymCom single-phase and three-phase voltage monitors provide basic protection against equipment failure caused by line-side voltage faults and rapid cycling (select models also protect against load-side voltage faults). This family of voltage monitors is designed to prevent equipment from starting or shut it down after startup before adverse conditions cause equipment damage.

Seal Leak and Leak/Temp Relays

In submersible pump applications, early indication of seal failure is critical to allow maintenance of the pump before additional damage occurs. Littelfuse SymCom seal leak and leak/temp relays provide protection against seal leaks and over-temperature by monitoring sensors within the pumps and providing early warning or disabling the pumps.

Our seal-leak detectors have a microcontroller-based relay that monitors the shaft seal of submersible pumps. If the seal is compromised, water leaks into the pump and causes the electrical resistance of the seal cavity to decrease. A probe inserted into the seal cavity detects this decrease. When the resistance drops below the sensitivity setpoint, the unit will trip and the relay will change states. The unit will automatically reset when a fault has cleared.

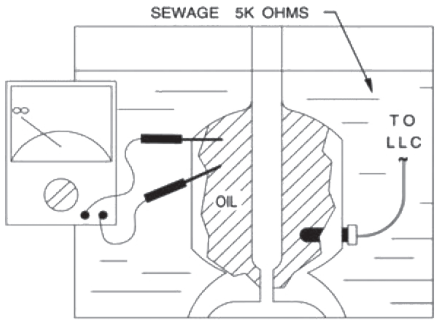

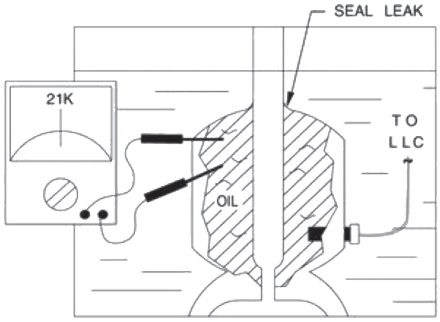

Pump Controllers and Alternating Relays

Multiple-pump applications often require balanced run times and redundancy. Littelfuse SymCom provides pump controllers (both intrinsically safe and non-IS) that are designed to handle multiple-pump applications. We also provide alternating relays which are designed to balance the run time between two independent loads, typical in many pumping and compressor applications. By balancing the run times, redundant equipment is equally exercised to provide greater system reliability.

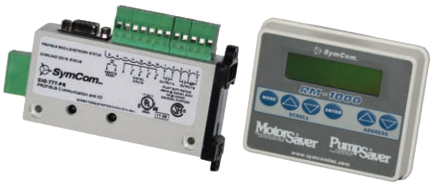

Remote Monitoring, Communications and Software

Accessibility and safety are key concerns when working with motors, pumps, and control panels. Littelfuse SymCom communications modules, software, and remote monitors provide accessibility and safety for enhanced overload relays and power monitors through many common industrial protocols.

In addition to providing communications, many of these modules also provide additional inputs and outputs for added control. Not only do our remote monitors eliminate the need to open a control panel door, thus reducing the risk of arc flash and exposure to high voltages for maintenance personnel, they include additional real-time, fault, and event monitoring capabilities.

SymCom, Inc.
222 Disk Drive
Rapid City, SD 57701
USA
Tel: + 1-800-843-8848
Fax: + 1-605-348-5685
E-mail: customerservice@symcom.com

Form: RC260
Rev: 1-A-010515