LTR	DATE	REVISION	CHK	APD
B	8/25/97	07637 - REINSTATED RFR		
C	06/29/04	83852D-CHG TOLERANCE TO ONE & TWO PLACE PJM		

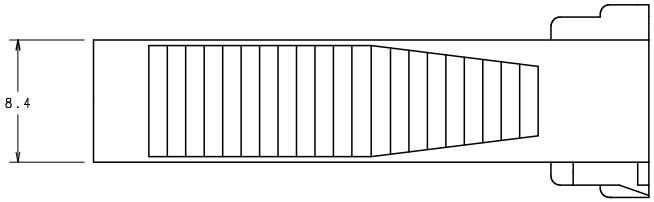

METRIC

UNLESS OTHERWISE SPECIFIED
ALL DIMENSIONS ARE MILLIMETERS

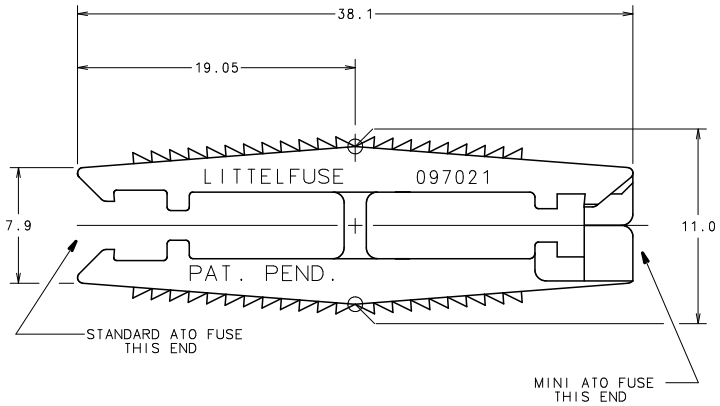

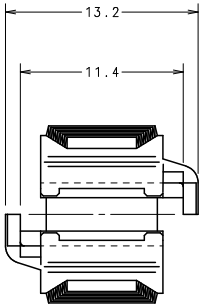

UNLESS OTHERWISE SPECIFIED, DIMENSIONS DO NOT INCLUDE PLATING.	
O	DENOTES CRITICAL CHARACTERISTICS.
CPK	DENOTES CPK DIMENSIONS,-MINIMUM CPK VALUE
ST	DENOTES A CHARACTERISTIC THAT PROVIDES AN INDICATION OF PROCESS PERFORMANCE. PROCEDURE FOR MEASUREMENT AND TRACKING TO BE DEFINED IN LITTELFUSE INSPECTION INSTRUCTIONS.
CP	DENOTES CP DIMENSIONS,-MINIMUM CP VALUE MUST BE WITHIN THE DIMENSIONAL LIMITATIONS SHOWN ON DRAWING AND INITIALLY LOCATED TO ALLOW FOR MAXIMUM TOOL LIFE.

COPIES TO				
1	9	18	MATL SPEC	THERMO PLASTIC COLOR - WHITE
2	10	19	FINISH	
3	12	20		
4	13	21	DRW RFR	DATE 8/25/97 SCALE 4:1
5	14	23		
6	15	33	CHK	DATE SUPER DR
7	16	43	APPD	DATE RAW STK WT
8	17	53		LBS/M

TOLERANCE UNLESS OTHERWISE SPECIFIED
ONE PLACE DEC ±.5 FRACTION ±
TWO PLACE DEC ±.25 ANGULAR ±1°

TITLE FUSE INSERTER AND EXTRACTOR (STD. & MINI ATO FUSES)

Littelfuse® DES PLAINES, ILLINOIS 60016 | REVISION C | DRWG. NO. OUTLINE 00970021N

UNCONTROLLED DOCUMENT

CAD GENERATED DRAWING - NO RENDS CHANGES ALLOWED