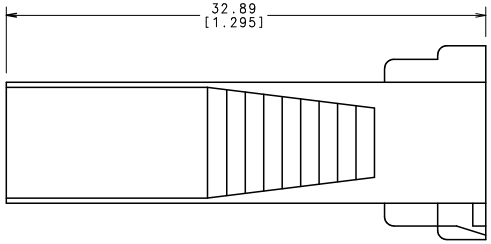

LTR	DATE	REVISION	CHK	APD
J	12/18/01	81836D-DLT VIEWS A & B & ALL DIMS EXCEPT AS SHOWN PJM		
K	06/29/04	83852D-CHG TOLERANCE TO ONE & TWO PLACE PJM		

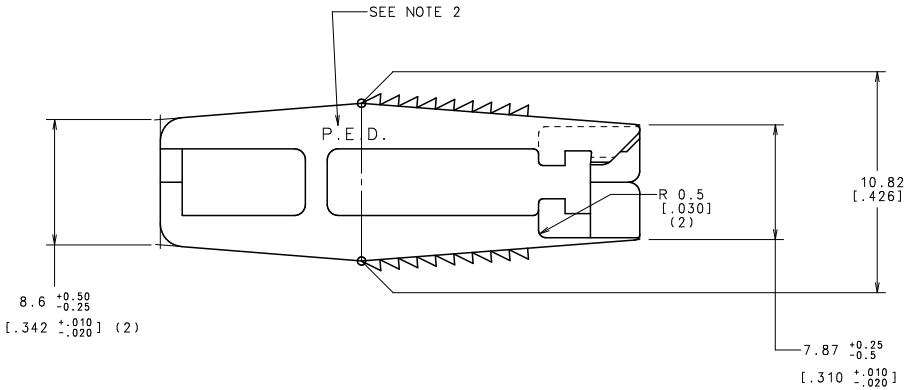

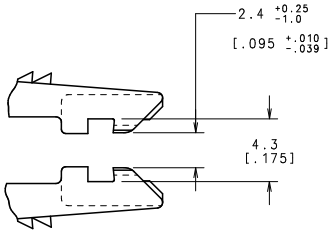

FUSE END GUIDES NOT SHOWN IN THIS VIEW

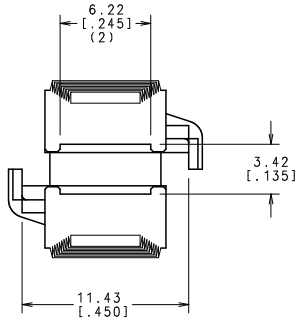

NOTES:
UNLESS OTHERWISE SPECIFIED:
1. 1 DEGREE MAXIMUM DRAFT PER SIDE.
2. LETTERING: .78 [.031] HIGH GOTHIC CHARACTERS. .07/.25 [.033/.010] RAISED IN AREA SHOWN.
3. ALL INTERNAL RADII TO BE .50 [.015] MAX.

NO	COMPONENT NO	DESCRIPTION	QTY/M	U/M

BILL OF MATERIAL

UNLESS OTHERWISE SPECIFIED, DIMENSIONS DO NOT INCLUDE PLATING.

O	DENOTES CRITICAL CHARACTERISTICS.
CPK	DENOTES CPK DIMENSIONS,-MINIMUM CPK VALUE
ST	DENOTES A CHARACTERISTIC THAT PROVIDES AN INDICATION OF PROCESS PERFORMANCE. PROCEDURE FOR MEASUREMENT AND TRACKING TO BE DEFINED IN LITTELFUSE INSPECTION INSTRUCTIONS.
CP	DENOTES CP DIMENSIONS,-MINIMUM CP VALUE MUST BE WITHIN THE DIMENSIONAL LIMITATIONS SHOWN ON DRAWING AND INITIALLY LOCATED ALLOW FOR MAXIMUM TOOL LIFE.

COPIES TO

1	9	18
2	10	19
3	12	20
4	13	21
5	14	23
6	15	33
7	16	4[illegible]
8	1[illegible]	

MATL SPEC NYLON 66 P.E.D. SPEC [illegible]0003

FINISH [illegible] WH[illegible]

DRW [illegible] 12/1[illegible] 4:1

CHK [illegible] DATE [illegible] SUPER DR

RAW STK WT LBS/M

TOLERANCE UNLESS OTHERWISE SPECIFIED
DEC FRACTION ±
ACE ANGULAR ±1°

TITLE FUSE INSERTER AND EXTRACTOR (MINI ATO FUSES)

METRIC
UNLESS OTHERWISE SPECIFIED
ALL DIMENSIONS ARE MILLIMETERS

UNCONTROLLED DOCUMENT

Littelfuse®
DES PLAINES, ILLINOIS 60016

REVISION K

DRWG. NO. 00970024Z

OUTLINE