CAD GENERATED DRAWING - NO PENCIL CHANGES ALLOWED

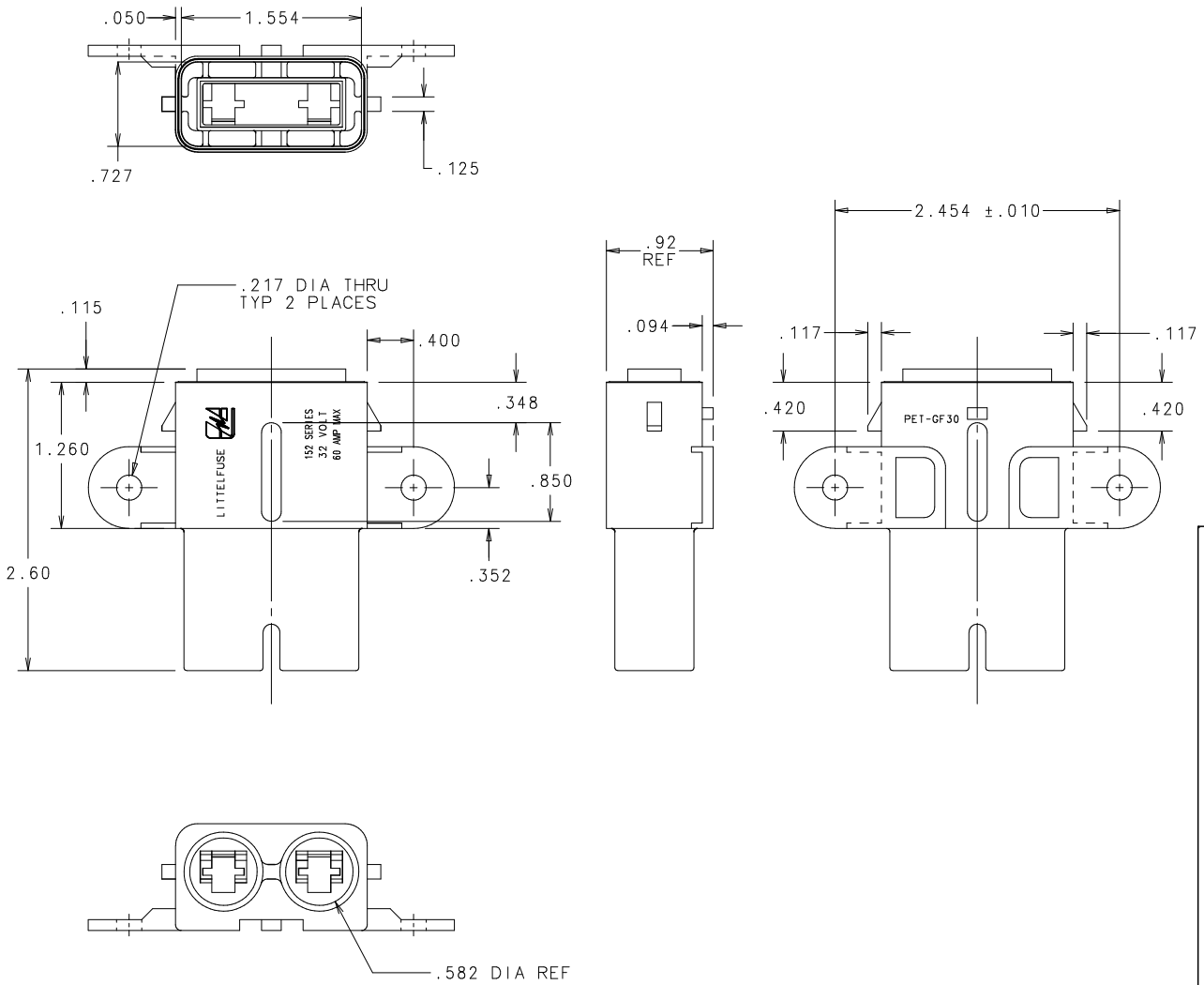

NO	COMPONENT NO	DESCRIPTION	QTY/M	U/M

BILL OF MATERIAL

MATL SPEC BLACK RYNITE | FINISH EDM FINISH

DRW	DHM	DATE 05/15/08	SCALE 1:1
CHK		DATE	SUPER DRW
APPD		DATE	RAW STK WT LBS/M

TOLERANCE UNLESS OTHERWISE SPECIFIED
TWO PLACE DEC ±.01 FRACTION ±
THREE PLACE DEC ±.005 ANGULAR ±1°

TITLE BODY: WITH MOUNTING TABS
SPLASH-PROOF MAXI FUSE HOLDER

littelfuse® DES PLAINES, ILLINOIS 60016

REVISION A | DRWG. NO. OUTLINE 01520005Z

COPIES TO			
1	9	18	
2	10	19	
3	12	20	
4	13	21	
5	14	23	
6	15	33	
7	16	43	
8	17	53	

LTR	REVISION	CHK	APD
A	000392ER-RELEASED 05/15/08 DHM		

UNLESS OTHERWISE SPECIFIED, DIMENSIONS DO NOT INCLUDE PLATING.

CC DENOTES CRITICAL CHARACTERISTICS.

CPK DENOTES CPK DIMENSIONS,-MINIMUM CPK VALUE

ST DENOTES A CHARACTERISTIC THAT PROVIDES AN INDICATION OF PROCESS PERFORMANCE. PROCEDURE FOR MEASUREMENT AND TRACKING TO BE DEFINED IN LITTELFUSE INSPECTION INSTRUCTIONS.

CP DENOTES CP DIMENSIONS,-MINIMUM CP VALUE (MUST BE WITHIN THE DIMENSIONAL LIMITATIONS SHOWN ON DRAWING AND INITIALLY LOCATED TO ALLOW OR MAXIMUM TOOL LIFE.

UNCONTROLLED DOCUMENT