CAD GENERATED DRAWING - NO PENCIL CHANGES ALLOWED

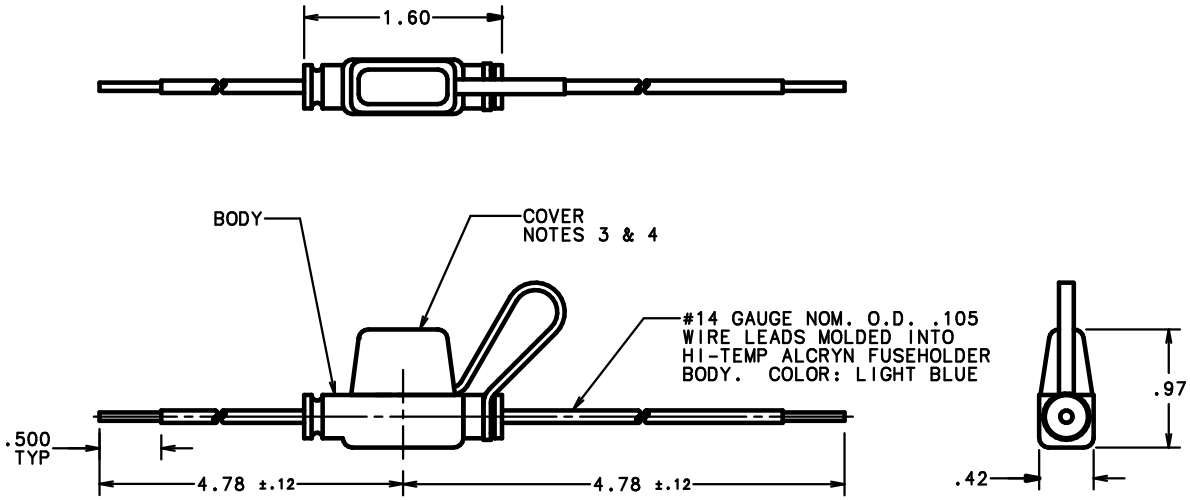

NOTES:
1. MAX. RATING, 20 AMPS, 32 VOLTS AT A MAXIMUM OPERATING TEMPERATURE OF 82° C.
2. BODY MATERIAL: ALCRYN, BLACK
   COVER MATERIAL: ALCRYN, BLACK
3. COVER TETHER IS SLID ON EITHER WIRE LEAD AND SEATED IN BODY GROOVE.
4. FUSEHOLDER IS SHIPPED WITH COVER ATTACHED BUT NOT SNAPPED ON THE BODY.

UNLESS OTHERWISE SPECIFIED, DIMENSIONS DO NOT INCLUDE PLATING.

CC DENOTES CRITICAL CHARACTERISTICS.

CP DENOTES CPK DIMENSIONS,-MINIMUM CPK VALUE

ST DENOTES A CHARACTERISTIC THAT PROVIDES AN INDICATION OF PROCESS PERFORMANCE. PROCEDURE FOR MEASUREMENT AND TRACKING TO BE DEFINED IN LITTELFUSE INSPECTION INSTRUCTIONS.

DENOTES CP DIMENSIONS,-MINIMUM CP VALUE TO BE WITHIN THE DIMENSIONAL LIMITATIONS SHOWN ON DRAWING AND INITIALLY LOCATED TO A VALUE FOR MAXIMUM TOOL LIFE.

NO	COMPONENT NO	DESCRIPTION	QTY/M	U/M

BILL OF MATERIAL

COPIES TO			
1	9	18	
2	10	19	
3	12	20	
4	13	21	
5	14	23	
6	15	33	
7	16	43	
8	17	53	

MATL SPEC | FINISH

		DATE	SCALE
DRW	PJM	10/15/01	1:1
CHK		DATE	SUPER DRW
APPD		DATE	RAW STK WT LBS/M

TOLERANCE UNLESS OTHERWISE SPECIFIED
TWO PLACE DEC ±.01 FRACTION ±
THREE PLACE DEC ±.005 ANGULAR ±1°

TITLE MINIFUSE HOLDER, INLINE

Littelfuse® DES PLAINES, ILLINOIS 60016

REVISION A DRWG. NO. SERIES OUTLINE 01530029Z

LTR	REVISION	CHK	APD
A	60683 - RELEASE 10/15/01 PJM		

UNCONTROLLED DOCUMENT