CAD GENERATED DRAWING - NO PENCIL CHANGES ALLOWED

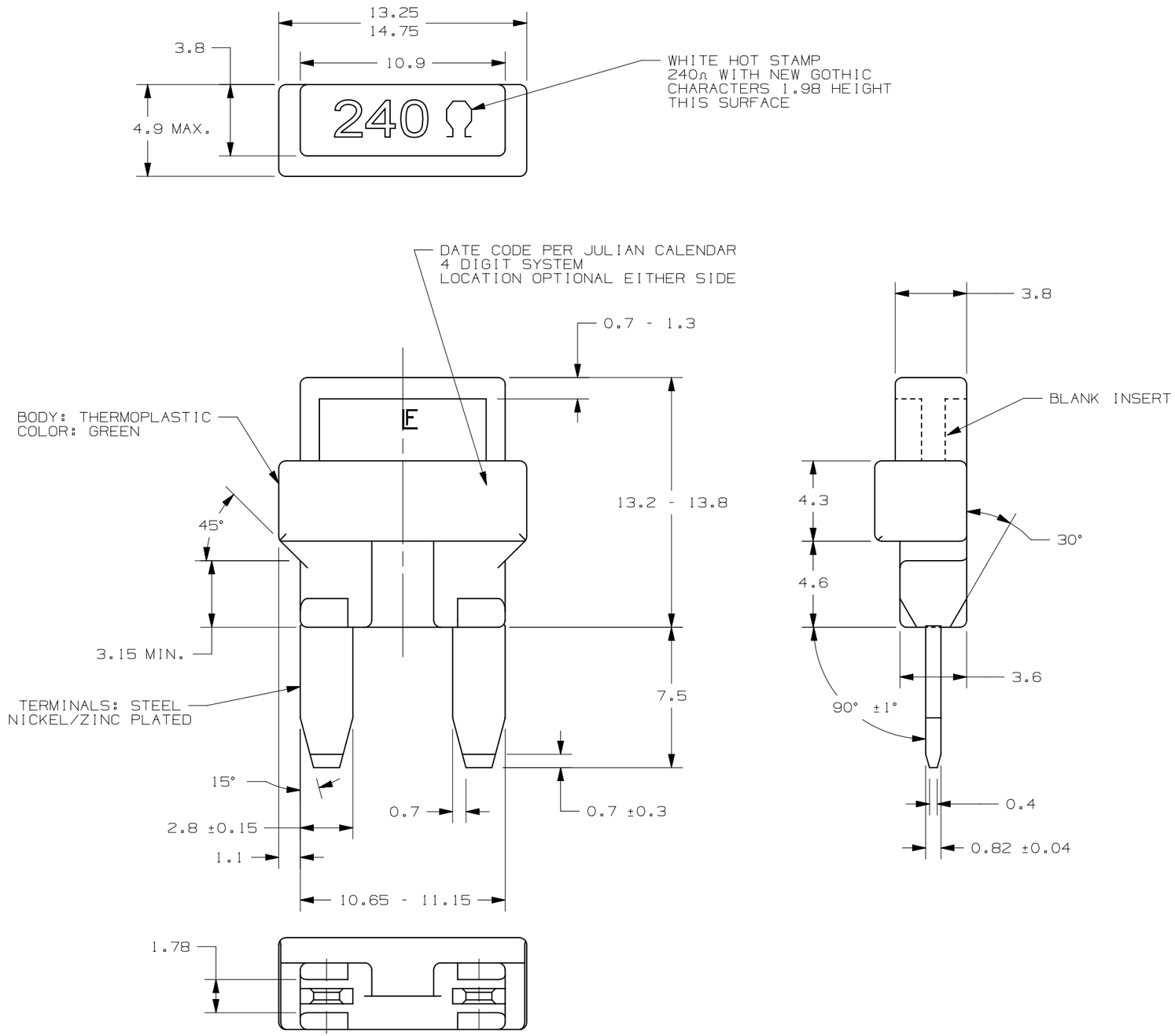

NOTES:

1. RESISTOR: 240 OHMS ±5% 1/2 WATT (METAL FILM)

METRIC

NO	COMPONENT NO	DESCRIPTION	QTY/M	U/M

BILL OF MATERIAL

UNLESS OTHERWISE SPECIFIED, DIMENSIONS ARE IN MILLIMETERS.
DIMENSIONS IN BRACKETS [ ] ARE INCHES
UNLESS OTHERWISE SPECIFIED, DIMENSIONS DO NOT INCLUDE PLATING.

◎ DENOTES CRITICAL CHARACTERISTICS.
CPK DENOTES CPK DIMENSIONS, -MINIMUM CPK VALUE
ST DENOTES A CHARACTERISTIC THAT PROVIDES AN INDICATION OF PROCESS PERFORMANCE. PROCEDURE FOR MEASUREMENT AND TRACKING TO BE DEFINED IN LITTELFUSE INSPECTION INSTRUCTIONS
CP DENOTES CP DIMENSIONS, -MINIMUM CP VALUE MUST BE WITHIN THE DIMENSIONAL LIMITATIONS SHOWN ON DRAWING AND INITIALLY LOCATED TO ALLOW FOR MAXIMUM TOOL LIFE

MATL SPEC
FINISH
COPIES TO 1 9 18 2 10 19 3 12 20 4 13 21 5 14 23 6 15 33 7 16 43 8 17 53

DRW PJM	DATE 11/30/01	SCALE 4:1
CHK	DATE	SUPER DR
APPD	DATE	FINSH GOOD WT GRAMS/PIECE

TOLERANCE UNLESS OTHERWISE SPECIFIED
ONE PLACE DEC +/-.3 THREE PLACE DEC +/-.100
TWO PLACE DEC +/-.25 ANGULAR +/-1°

3RD ANGLE PROJECTION

TITLE RESISTOR ASSEMBLY

Littelfuse® DES PLAINES, ILLINOIS 60016

REVISION E | DRWG. NO. 02400114P | OUTLINE

LTR	DATE	REVISION	CHK	APD
A	11/30/01	60715-RELEASED PJM		
B	04/24/02	82123D-CHG. TOLERANCES PJM		
C	09/13/07	85439D-REDRAWN IN UG 4.3 WAS 4.6 3.6 WAS 3.8 1.8 WAS 0.7 GMB		
D	09/01/09	001215EC-REMOVED ALL CPK MARKINGS GMB		
E	11/30/11	503801ECA-CHANGE DIMENSIONS, SEE ECO OPL		