ASSEMBLY NO.	BASE STYLE	BASE NO	BOLT	JAM NUT	COVER NO.	COVER OPENING	PART NO AND/OR LOGO	FUSE NO.	WASHER	NUT	TETHER	RACHET FASTENER	GLYPTOL
02981001ZXSS	1	2989001-1	354.1302.2508	354.1302.8000	2989001-15	A B C D	N/A	NONE	NONE	NONE	890-515	NONE	NONE
02981002ZXSS	2	2989001-2	354.1302.2508	903-129-005	2989001-28	B C	N/A	NONE	NONE	NONE	890-515	NONE	087160

LTR	DATE	REVISION	CHK	APD
A	05/08/10	500614ERA-REDRAWN IN UG OPL		
B	03/20/12	504206ERA-ADD P/N 02981002ZXSS OPL		
C	05/08/12	504868ERA-IN DRAWING CHANGE VIEW NAME FROM: "BASE STYLE 1" TO: "BASE STYLE 2" OPL		

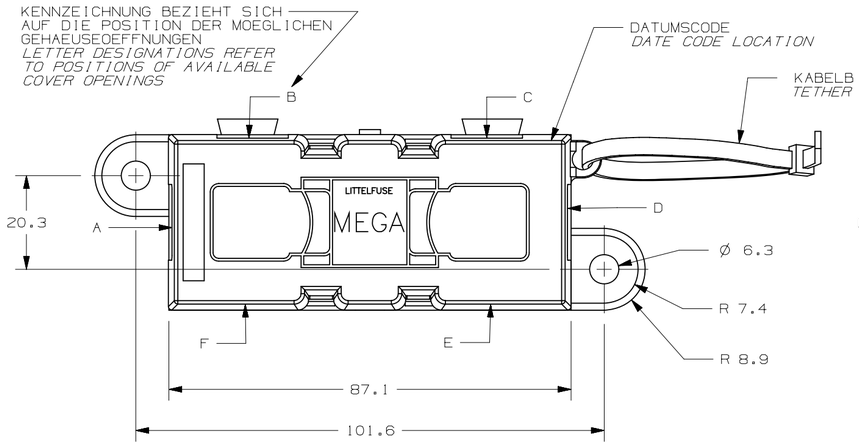

BASE STYLE 1

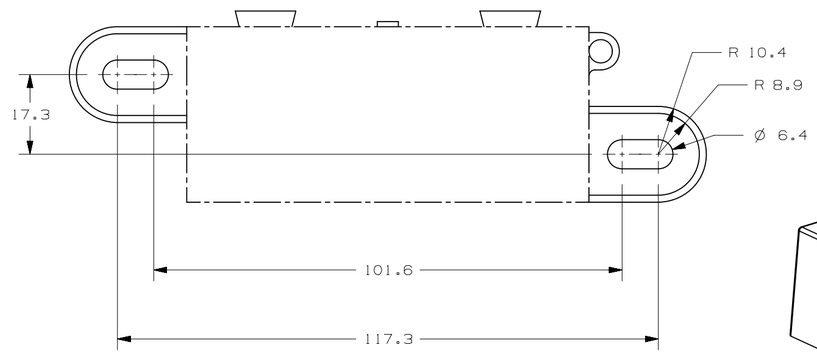

BASE STYLE 2

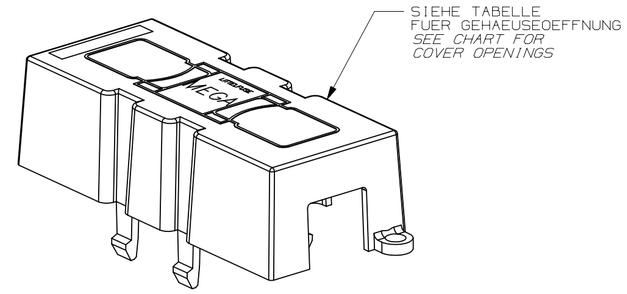

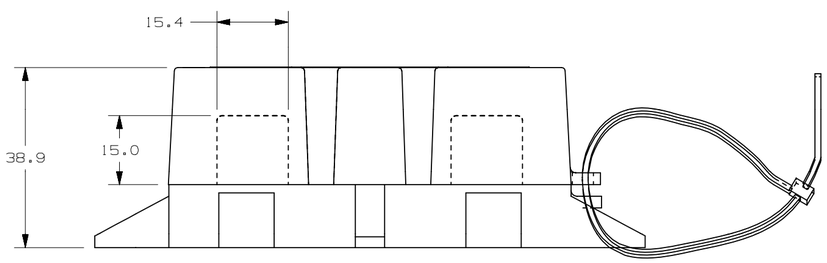

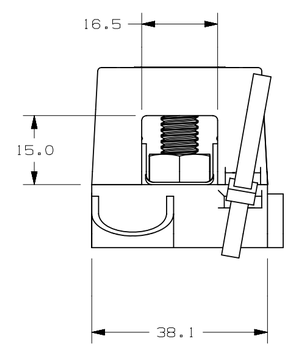

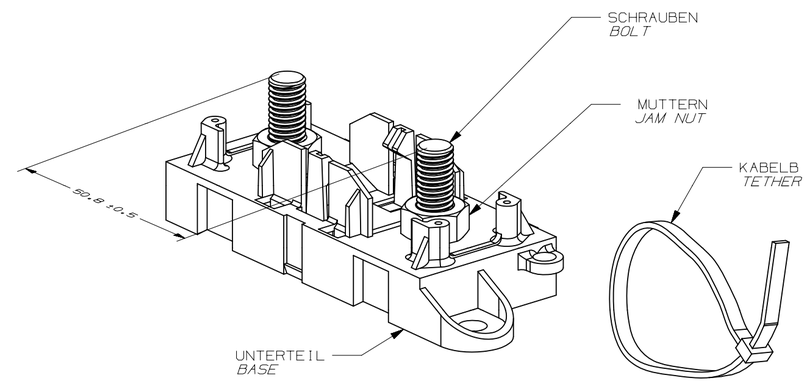

IDEE UEBER DIE MONTAGE
(NUR REFERENZ)
GENERAL HOLDER & FUSE CONSTRUCTION
(REFERENCE ONLY)

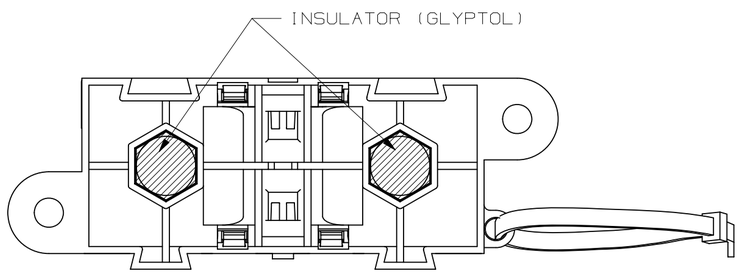

MATERIALS:

* UNTERTEIL - THERMOPLAST
  FARBE - SCHWARZ
* GEHAEUSE - THERMOPLAST
  FARBE - SCHWARZ
* KABELB - THERMOPLAST
  FARBE - SCHWARZ
* SCHRAUBEN UND MUTTERN - M8 x 1.25 STAHL
* ISOLATOR-GLYPTOL

MATERIALS:

* *BODY - GLASS FILLED THERMOPLASTIC*
  COLOR - BLACK
* *COVER - THERMOPLASTIC*
  COLOR - BLACK
* *TETHER - THERMOPLASTIC*
  COLOR - BLACK
* *STUDS & NUTS - M8 X 1.25 STEEL STAINLESS STEEL*
* *INSULATOR-GLYPTOL*

METRIC

NO	COMPONENT NO	DESCRIPTION	QTY/M	U/M

BILL OF MATERIAL

UNLESS OTHERWISE SPECIFIED, DIMENSIONS ARE IN MILLIMETERS.
DIMENSIONS IN BRACKETS [ ] ARE INCHES

UNLESS OTHERWISE SPECIFIED, DIMENSIONS DO NOT INCLUDE PLATING.

◎	DENOTES CRITICAL CHARACTERISTICS.
CPK	DENOTES CPK DIMENSIONS, -MINIMUM CPK VALUE
⟨ST⟩	DENOTES A CHARACTERISTIC THAT PROVIDES AN INDICATION OF PROCESS PERFORMANCE. PROCEDURE FOR MEASUREMENT AND TRACKING TO BE DEFINED IN LITTELFUSE INSPECTION INSTRUCTIONS
CP	DENOTES CP DIMENSIONS, -MINIMUM CP VALUE MUST BE WITHIN THE DIMENSIONAL LIMITATIONS SHOWN ON DRAWING AND INITIALLY LOCATED TO ALLOW FOR MAXIMUM TOOL LIFE

COPIES TO

1	9	18
2	10	19
3	12	20
4	13	21
5	14	23
6	15	33
7	16	43
8	17	53

MATL SPEC

FINISH

DRW GMB	DATE 05/08/10	SCALE FULL
CHK	DATE	SUPER DR
APPD	DATE	FINSH GOOD WT GRAMS/PIECE

TOLERANCE UNLESS OTHERWISE SPECIFIED
ONE PLACE DEC +/-.3
TWO PLACE DEC +/-.15
THREE PLACE DEC +/-.100
ANGULAR +/-1°

3RD ANGLE PROJECTION

TITLE
MEGAFUSE HOLDER

Littelfuse®
DES PLAINES, ILLINOIS 60016

REVISION	DRWG. NO.	OUTLINE
C	02981001ZXSS	

CAD GENERATED DRAWING – NO PENCIL CHANGES ALLOWED