THIS DRAWING AND THE INFORMATION CONTAINED WITHIN IT ARE CONFIDENTIAL AND MAY NOT BE COPIED OR DISCLOSED WITHOUT THE WRITTEN PERMISSION OF LITTELFUSE.

REVISIONS

ZONE	REV.	DESCRIPTION	DATE	APPROVED
	A	510069ERA - RELEASE FYUE	02/07/2014	
	B	ECR #522133 STUD AND HARDWARE MATERIAL CHANGE FROM ZINC-PLATED STEEL TO STAINLESS STEEL JLI	03/25/2020	

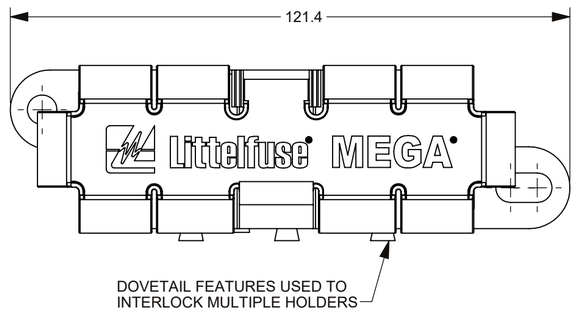

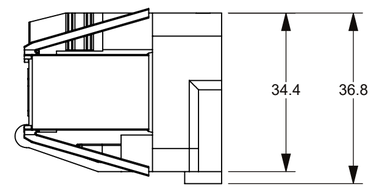

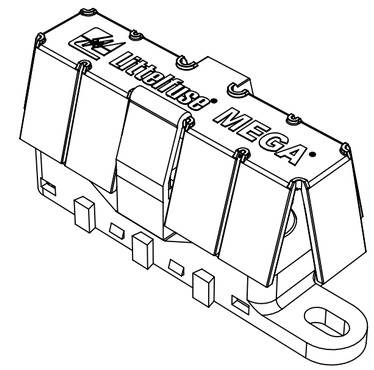

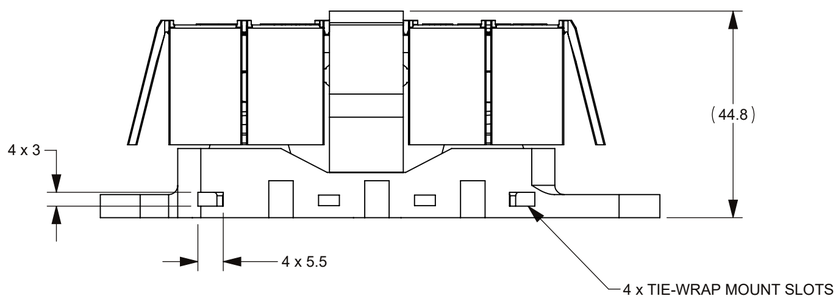

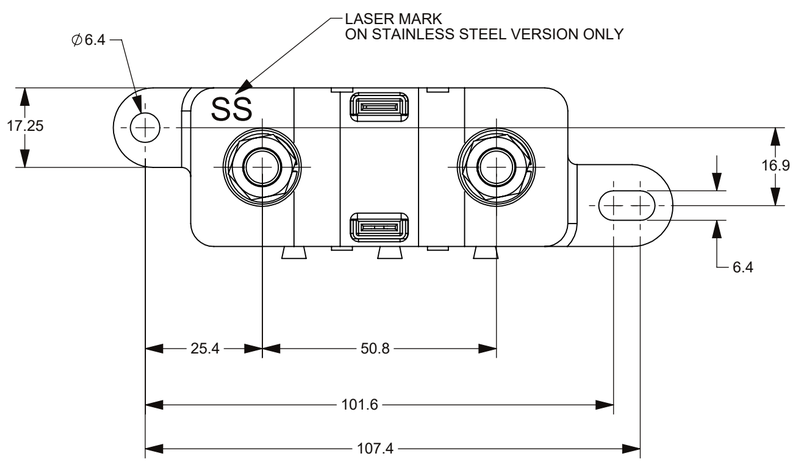

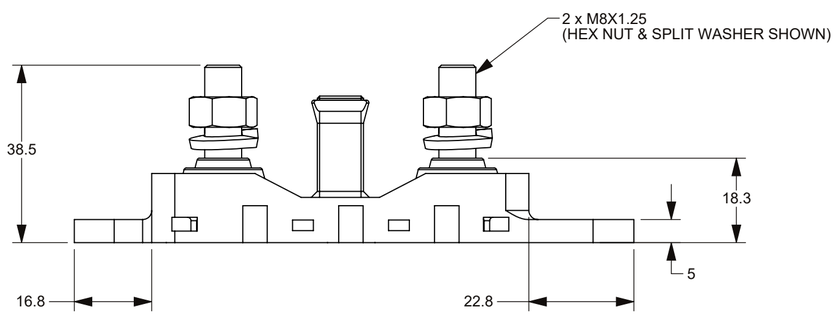

NOTES:
1) BASE: UL94V-0 GLASS-FILLED PPA, BLACK
M8 STUDS: STAINLESS STEEL
HEX NUTS & SPLIT WASHERS: STAINLESS STEEL
COVER: UL94V-0 ELASTOMER, RED
2) MAX FUSE RATING: 500A
3) M8 STUD TORQUE: 25Nm MINIMUM
MOUNTING TORQUE (W/ M6 BOLTS & WASHERS): 5Nm
4) TEMPERATURE RATING: -40°C TO 125°C
5) WIRE SIZE: 8mm² TO 30mm²

PART NO.	DESCRIPTION	MATERIAL (STUD & HARDWARE)
02981028HXFCCR	COVER ONLY	
02981028HXFC-RED	ASSEMBLY	STAINLESS STEEL

DIMENSIONS ARE SHOWN IN MILLIMETERS. DIMENSIONS AND TOLERANCES ARE DEFINED ACCORDING TO ANSI/ASME Y14.5-1994.

●	FIT FUNCTION CRITICAL CHARACTERISTICS SYMBOL
<S>	SAFETY/ COMPLIANCE CRITICAL CHARACTERISTICS SYMBOL
CPK	DENOTES CPK DIMENSIONS MINIMUM CPK VALUE
ST	DENOTES A CHARACTERISTIC THAT PROVIDES AN INDICATION OF PROCESS PERFORMANCE.PROCEDURE FOR MEASUREMENTAND TRACKINGTO BE DEFINED IN LITTELFUSE INSPECTION INSTRUCTIONS
CP	DENOTES CP DIMENSIONS, -MINIMUM CP VALUE MUST BE WITHIN THE DIMENSIONAL LIMITATIONS SHOWN ON DRAWING AND INITIALLY LOCATED TO ALLOW FOR MAXIMUM TOOL LIFE

DIMENSION; MM TOLERANCES UNLESS OTHERWISE SPECIFIED
ONE PLACE DECIMAL ± 0.5 THREE PLACES DECIMAL ± 0.100
TWO PLACES DECIMAL ± 0.20 ANGULAR ± 2°

	NAME	DATE
DRAWN	FYUE	02/07/2014
CHECKED	-	-
	-	-
	-	-

Littelfuse®
Expertise Applied | Answers Delivered

FORM NO: CVP-PE40-0006 REV A
THIRD ANGLE PROJECTION
DO NOT SCALE DRAWING

TITLE
HOLDER MEGA FUSE
WITH RED FLEX COVER

SIZE	DWG. NO.	OUTLINE	REV.
C	OL-02981028HXFC-RED		B

SCALE 1:1 SHEET 1 OF 1