CAD GENERATED DRAWING - NO PENCIL CHANGES ALLOWED (rev C)

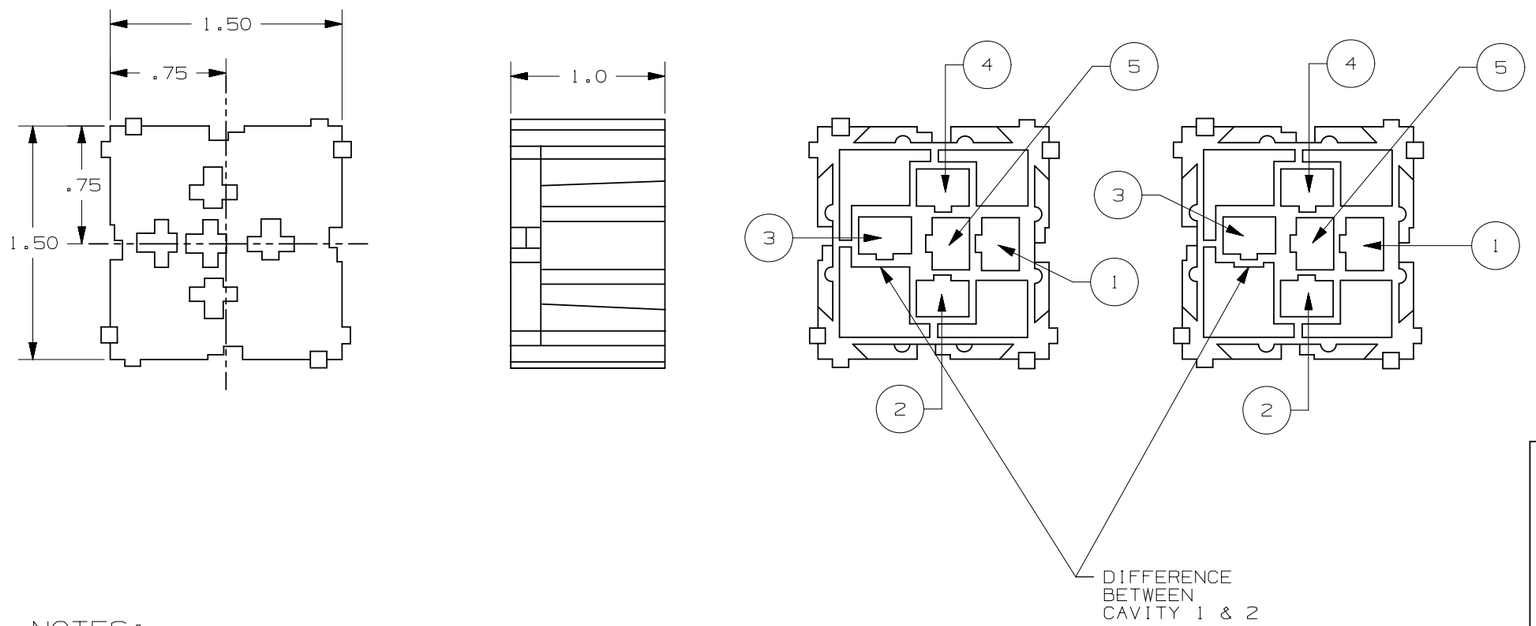

NOTES:
1. MAT'L.-NYLON.

UNLESS STATED OTHERWISE DIMENSIONS ARE IN INCHES AND TOLERANCES ARE:
.X +/- .025
.XX +/- .015
.XXX +/- .005
FRACTIONAL +/- 1/64
ANGULAR +/- 30 MIN

UNLESS OTHERWISE SPECIFIED, DIMENSIONS DO NOT INCLUDE PLATING.

◎	DENOTES CRITICAL CHARACTERISTICS.
CPK	DENOTES CPK DIMENSIONS, -MINIMUM CPK VALUE
ST	DENOTES A CHARACTERISTIC THAT PROVIDES AN INDICATION OF PROCESS PERFORMANCE. PROCEDURE FOR MEASUREMENT AND TRACKING TO BE DEFINED IN LITTELFUSE INSPECTION INSTRUCTIONS
CP	DENOTES CP DIMENSIONS, -MINIMUM CP VALUE MUST BE WITHIN THE DIMENSIONAL LIMITATIONS SHOWN ON DRAWING AND INITIALLY LOCATED TO ALLOW FOR MAXIMUM TOOL LIFE

NO	COMPONENT NO	DESCRIPTION	QTY/M	U/M

BILL OF MATERIAL

MATL SPEC: NYLON COLOR: BLACK

FINISH: -

DRW	OPL	DATE 01/14/13	SCALE -
CHK		DATE	SUPER DR
APPD		DATE	FINSH GOOD WT

COPIES TO: 1 9 18, 2 10 19, 3 12 20, 4 13 21, 5 14 23, 6 15 33, 7 16 43, 8 17 53

TOLERANCE: SEE TABLE

3RD ANGLE PROJECTION

TITLE: RELAY MODULE

Littelfuse® CHICAGO, USA 773-628-1000

REVISION: A

DRWG. NO. OL-035405067

OUTLINE

LTR	DATE	REVISION	CHK	APD
A	01/14/13	507227ERA-RELEASED		