CAD GENERATED DRAWING - NO PENCIL CHANGES ALLOWED

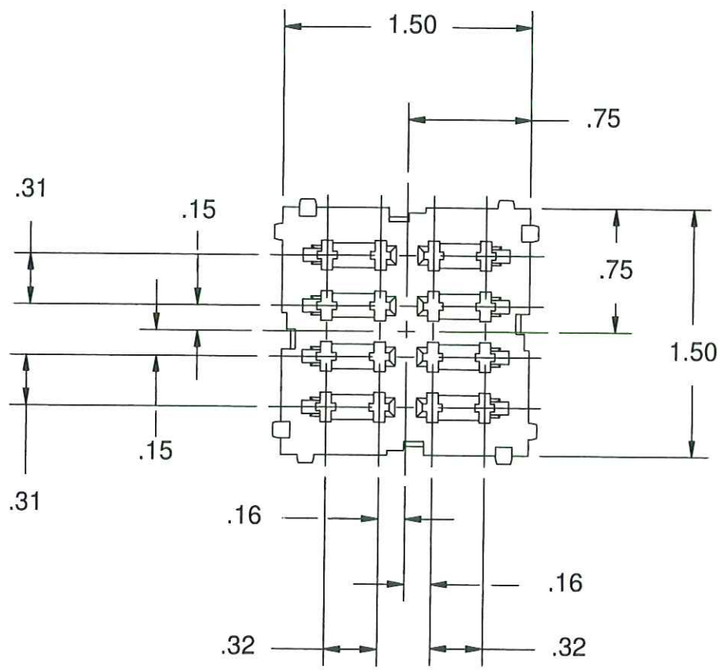

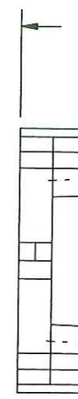

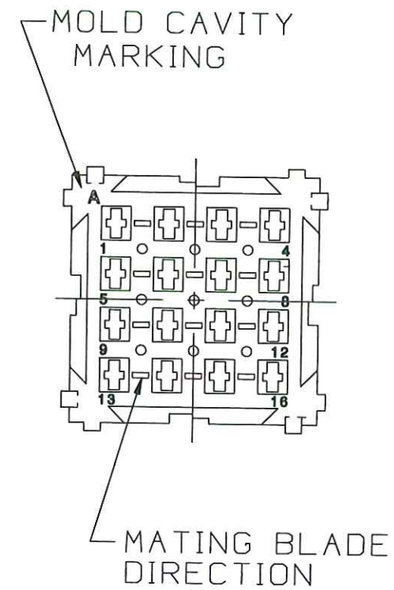

COMPONENT NO	DESCRIPTION	QTY/M	U/M

BILL OF MATERIAL

MATL SPEC		FINISH	
DRW	JU	DATE	10/12/2009
CHK		DATE	
APPD		DATE	
SCALE	---		
SUPER DRW			
RAW STK WT			LBS/M

TOLERANCE UNLESS OTHERWISE SPECIFIED
TWO PLACE DEC ±.01 FRACTION ±
THREE PLACE DEC ±.005 ANGULAR ±1°

COPIES TO		
1	9	18
2	10	19
3	12	20
4	13	21
5	14	23
6	15	33
7	16	43
8	17	53

TITLE: 8 - POS. MINI FUSE MODULE - BULK

Littelfuse®
DES PLAINES, ILLINOIS 60016

REVISION: A

DRWG. NO. 03540544Z

FINAL

LTR	REVISION	CHK	APD
A	000807ER- RELEASED		

UNLESS OTHERWISE SPECIFIED, DIMENSIONS DO NOT INCLUDE PLATING.

●	DENOTES CRITICAL CHARACTERISTICS.
CPK	DENOTES CPK DIMENSIONS,-MINIMUM CPK VALUE
ST	DENOTES A CHARACTERISTIC THAT PROVIDES AN INDICATION OF PROCESS PERFORMANCE. PROCEDURE FOR MEASUREMENT AND TRACKING TO BE DEFINED IN LITTELFUSE INSPECTION INSTRUCTIONS.
CP	DENOTES CP DIMENSIONS,-MINIMUM CP VALUE MUST BE WITHIN THE DIMENSIONAL LIMITATIONS SHOWN ON DRAWING AND INITIALLY LOCATED TO ALLOW FOR MAXIMUM TOOL LIFE.