CAD GENERATED DRAWING - NO PENCIL CHANGES ALLOWED (FORM rev N)

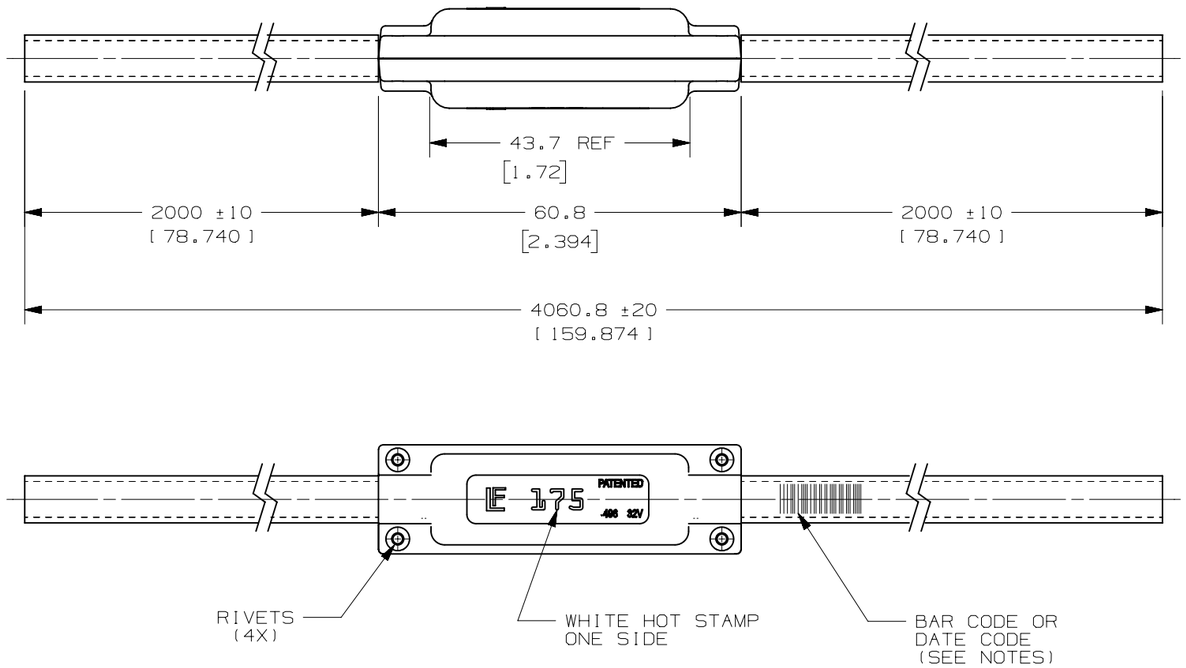

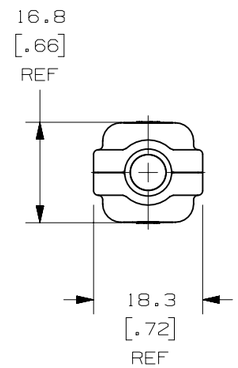

% OF RATING	OPENING TIME	
	MINIMUM	MAXIMUM
100	100 HRS	-
135	120 S	1800 S
200	10 S	300 S
350	1 S	15 S
600	0.3 S	5 S

NOTES:
INTERRUPT RATING: 2000A @ 32VDC
VOLTAGE RATING: 32VDC
TEMP. RATING: -40°C - 125°C
CABLE TYPE: XLPE, SAE J1127, STX (4AWG), COLOR RED.
SPECIFICATION: MEETS LITTELFUSE'S VS-006013 SPECIFICATION
APPLICATION: DESIGNED FOR UNDERHOOD INSTALLMENT.
BAR CODE OR DATA CODE: THE BAR CODE OR DATE CODE IS USED FOR LOT TRACEABILITY. IT IS LOCATED ON ONE OF THE CABLE LEADS.

METRIC
ASSEMBLY

UNLESS OTHERWISE SPECIFIED, DIMENSIONS ARE IN MILLIMETERS. DUAL DIMENSIONS IN BRACKETS [ ] ARE INCHES AND FOR REFERENCE ONLY.
UNLESS OTHERWISE SPECIFIED, DIMENSIONS DO NOT INCLUDE PLATING.
S — CRITICAL CHARACTERISTIC FOR PART SAFETY/COMPLIANCE.
● — CRITICAL CHARACTERISTIC FOR PART FIT/FUNCTION.
CPK — CPK DIMENSION. 1.67 MINIMUM CPK VALUE ON NEW TOOLING.
ST — STATISTICAL PROCESS CONTROL DIMENSION. THIS DIMENSION INDICATES PROCESS PERFORMANCE. DATA SHALL BE TRACKED AND ANALYZED AT PERIODIC TIMES, ACC. TO CONTROL PLAN.
CP — CP DIMENSION. 1.67 MINIMUM CP VALUE. MUST BE INITIALLY LOCATED TO ALLOW FOR MAXIMUM TOOL LIFE.
1 — CUSTOMER-DESIGNATED CHARACTERISTIC. REQUIREMENT FOR EACH SYMBOL TO BE DEFINED IN A CONVERSION TABLE.
C — CLAMP DIMENSION. PARTS SHALL BE SECURED BEFORE TAKING DIMENSIONAL MEASUREMENTS. FIXTURING DATUMS & PROCEDURES TO BE DEFINED IN NOTES OR SEPARATE PROCESS DOCUMENTS.

MATL SPEC -
FINISH -
SIZE B
DRW PJM
CHK -
DATE 12/14/04
DIMENSIONS & TOLERANCES ACC. TO ASME Y14.5-2009
3RD ANGLE PROJECTION
SCALE FULL
TOLERANCES UNLESS OTHERWISE SPECIFIED

LINEAR DIMENSIONS						ANGLES	RADII
DIM	.5 - UP TO 6	OVER 6 - UP TO 30	OVER 30 - UP TO 120	OVER 120 - UP TO 400		±0.5°	±0.2
TOL	±0.1	±0.2	±0.3	±0.5			

TITLE CABLEPRO

Littelfuse® CHICAGO, USA 773-628-1000
REVISION C
DRWG. NO. OUTLINE OL-0496175.ZXA

LTR	DATE	REVISION	DRW
A	12/14/04	61573-RELEASED	PJM
B	05/31/06	84765B-ADD NOTES FOR BAR CODE	DHM
C	22/APR/19	520732ECA-UPDATE TOLERANCE & DRAWING FORMAT	OPL