CAD GENERATED DRAWING - NO PENCIL CHANGES ALLOWED

PART NUMBER	COMPONENTS			MARKING ON BASE
	COVER PART #	BASE PART #	HARDWARE	
04980921GXM5	498921-1	498921-2	ZINC-PLATED NYLOCK NUT	NONE
~~04980921GXM5-SS~~	~~498921-1~~	~~498921-3~~	~~STAINLESS STEEL NYLOCK NUT~~	~~SS~~

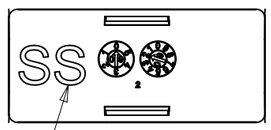

MARKING
(SEE CHART)

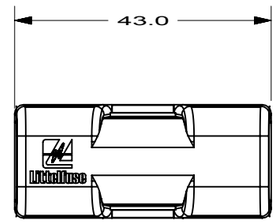

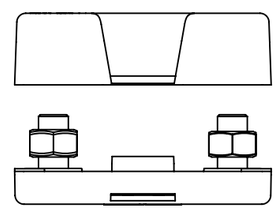

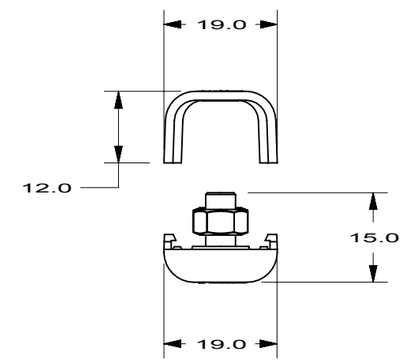

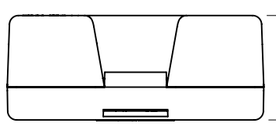

WITH COVER
INSTALLED

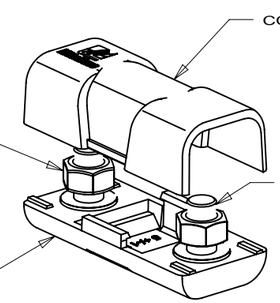

NOTES:
1. MATERIAL:
   BASE/COVER: UL94V-0 GLASS FILLED NYLON
   STUDS: SEE CHART
   NUTS: SEE CHART WITH NYLOK INSERTS
2. TORQUE RATING: 5±1 Nm
3. FUSE RATING: 30-200A
4. WIRE SIZE: 14-4 AWG (2.5mm²-20mm²)
5. TEMPERATURE RATING: -40°C TO 125°C
6. PARTS ARE SHIPPED BULK WITH NUTS
   FINGER TIGHTENED AND COVER UNINSTALLED.

METRIC
ASSEMBLY

COMPONENT NO	DESCRIPTION	QTY/M	U/M

BILL OF MATERIAL

UNLESS OTHERWISE SPECIFIED, DIMENSIONS ARE IN MILLIMETERS. DIMENSIONS IN BRACKETS [ ] ARE INCHES

UNLESS OTHERWISE SPECIFIED, DIMENSIONS DO NOT INCLUDE PLATING.

◎ DENOTES CRITICAL CHARACTERISTICS.

CPK DENOTES CPK DIMENSIONS, -MINIMUM CPK VALUE

ST DENOTES A CHARACTERISTIC THAT PROVIDES AN INDICATION OF PROCESS PERFORMANCE. PROCEDURE FOR MEASUREMENT AND TRACKING TO BE DEFINED IN LITTELFUSE INSPECTION INSTRUCTIONS

CP DENOTES CP DIMENSIONS, -MINIMUM CP VALUE MUST BE WITHIN THE DIMENSIONAL LIMITATIONS SHOWN ON DRAWING AND INITIALLY LOCATED TO ALLOW FOR MAXIMUM TOOL LIFE

MATL SPEC

FINISH

COPIES TO: 1 9 18 / 2 10 19 / 3 12 20 / 4 13 21 / 5 14 23 / 6 15 33 / 7 16 43 / 8 17 53

DRW	GMB	DATE 05/20/10
CHK		DATE
APPD		DATE

SCALE 1:1

SUPER DR

FINSH GOOD WT GRAMS/PIECE

TOLERANCES UNLESS OTHERWISE SPECIFIED (REF. ISO 2768-mK)

	UP TO 0.5 - 3	OVER 3 - 6	UP TO OVER 6 - 30	UP TO OVER 30 - 120	UP TO OVER 120 - 400
DIMENSION					
TOLERANCE	±0.1	±0.1	±0.2	±0.3	±0.5

3RD ANGLE PROJECTION

TITLE HOLDER MIDI, M5 NUT W/INSERT & COVER

Littelfuse® DES PLAINES, ILLINOIS 60016

REVISION C

DRWG. NO. OL-04980921GXM5

OUTLINE

LTR	DATE	REVISION	CHK	APD
A	05/20/10	SA289-RELEASE GMB		
B	09/28/10	500860ERA-RELEASE 04980921GXM5-SS GMB		
C	06/14/12	503912ECA-OBSOLETE 04980921GXM5-SS FYUE		