TIME-CURRENT CHARACTERISTICS			
% RATED CURRENT	RATED CURRENT	MINIMUM	MAXIMUM
100%	125A	4 HRS	-
135%		120 SECONDS	1800 SECONDS
200%		1.0 SECONDS	100 SECONDS
350%		0.3 SECONDS	5.0 SECONDS
600%		0.1 SECONDS	1.0 SECONDS

LTR	DATE	REVISION	CHK	APD
A	02/01/13	50715KERA-SEE ERN GMB		
B	04/12/13	50801BECA-1.5 MIN, MAS 100 HRS IN TC CHART GMB		
C	12/11/13	50890KECA-2.0 MAS 1.8, 10.5 MAS 10.4, 14 MAS 14.05 GMB		

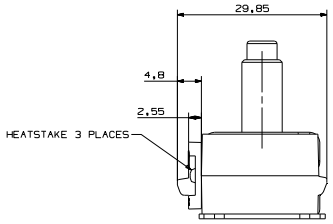

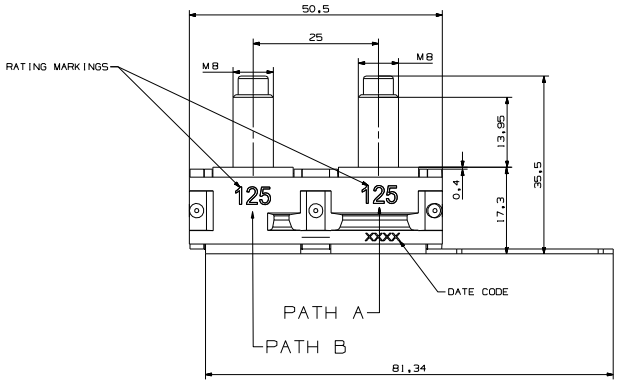

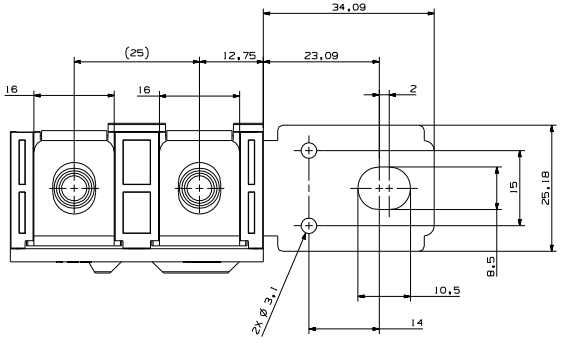

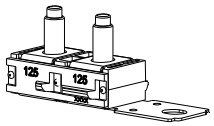

NOTES:

1. EACH PART SHALL BE LASER MARKED, AS SHOWN, WITH THE FOLLOWING:
   - INDIVIDUAL ELEMENT RATINGS
   - TRACEABILITY CODE
   - LITTELFUSE, PATENT PEND, & 32V
2. ELEMENT MATERIAL: 1.0±0.05 C110 COPPER, TIN-PLATED
   HOUSING AND COVER MATERIAL: AMODEL 33% GLASS (BLACK THERMOPLASTIC)
   BOLTS: SAE 8.8 GRADE, ZINC PLATED
3. SURFACE SCRATCHES ARE ACCEPTABLE AS LONG AS THE BARE COPPER IS NOT EXPOSED.
   BLANKED EDGES WILL HAVE BARE COPPER EXPOSED.
4. VALIDATION PER ISO 8820-5
5. M8 TORQUE 11±1 Nm

NO	COMPONENT NO	DESCRIPTION	QTY/M	U/M

BILL OF MATERIAL

UNLESS OTHERWISE SPECIFIED, DIMENSIONS ARE IN MILLIMETERS. DIMENSIONS IN BRACKET [ ] ARE INCHES.

UNLESS OTHERWISE SPECIFIED, DIMENSIONS DO NOT INCLUDE PLATING.

◎	DENOTES CRITICAL CHARACTERISTICS.
CPK	DENOTES CPK DIMENSIONS, -MINIMUM CPK VALUE
ST	DENOTES A CHARACTERISTIC THAT PROVIDES AN INDICATION OF PROCESS PERFORMANCE. PROCEDURE FOR MEASUREMENT AND TRACKING TO BE DEFINED IN MFG & LITTELFUSE INSPECTION INSTRUCTIONS
CP	DENOTES CP DIMENSIONS, -MINIMUM CP VALUE MUST BE WITHIN THE DIMENSIONAL LIMITATIONS SHOWN ON DRAWING AND INITIALLY LOCATED TO ALLOW FOR MAXIMUM TOOL LIFE

A 1

COPIES TO

1 9 18	MATL SPEC			
2 10 19	FINISH			
3 12 20				
4 13 21	DRW GMB	DATE 02/01/13	SCALE 2:1	
5 14 23	CHK	DATE	SUPER DR	
6 15 33				
7 16 43	APPD	DATE	FINSH GOOD WT GRAMS/PIECE	
8 17 53				

TOLERANCES UNLESS OTHERWISE SPECIFIED (REF. ISO 2768-mK)

DIMENSION	0.5 - 3	OVR 3 - 6	OVR 6 - 30	OVR 30 - 120	OVR 120 - 400
TOLERANCE	±0.1	±0.1	±0.2	±0.3	±0.5

1ST ANGLE PROJECTION

TITLE

2WAY ZCASE 125/125

Littelfuse 27243 DUENSEN, GERMANY

REVISION C

DRWG. NO. OL-05980016Z-CN

METRIC ASSEMBLY

CAD GENERATED DRAWING - NO PENCIL CHANGES ALLOWED