THIS DRAWING AND THE INFORMATION CONTAINED WITHIN IT ARE CONFIDENTIAL AND MAY NOT BE COPIED OR DISCLOSED WITHOUT THE WRITTEN PERMISSION OF LITTELFUSE.

REVISIONS

REV.	DESCRIPTION	DATE	DESIGNED	APPROVED
A	First issue of outline drawing	22-May-20	L.Dal Molin	M.Tinto

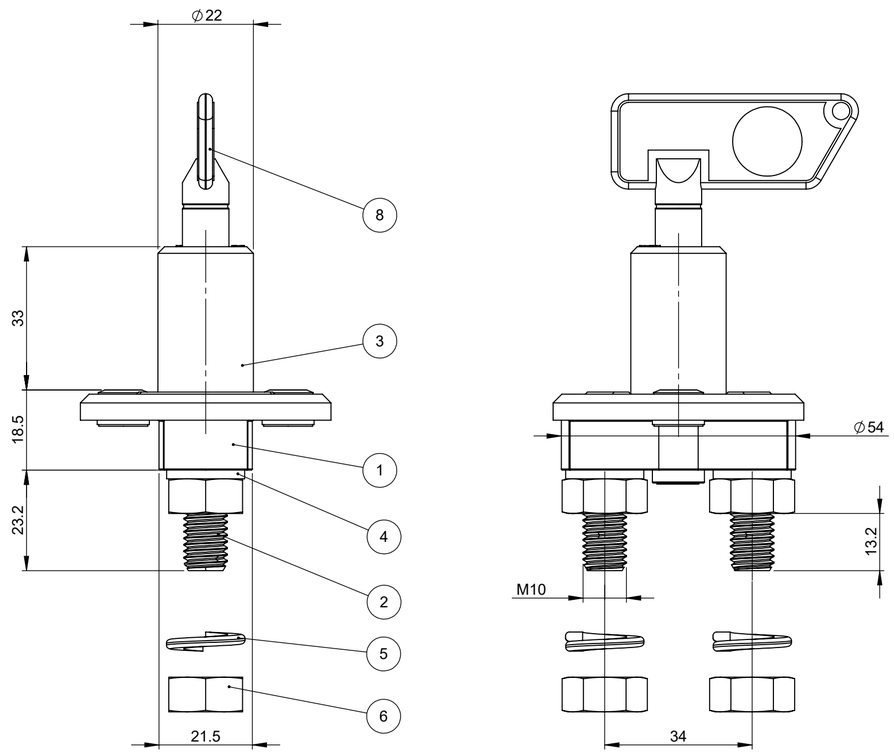

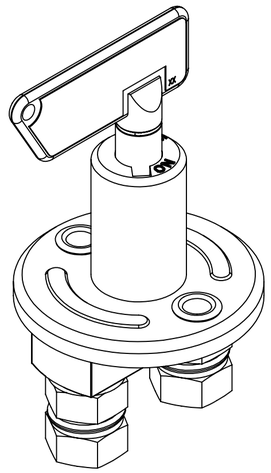

SCALE 1:1

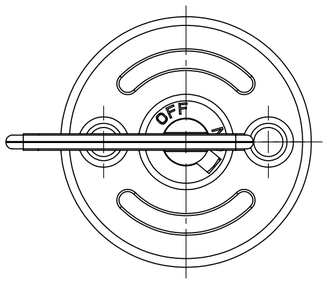

CLOSED CONTACT

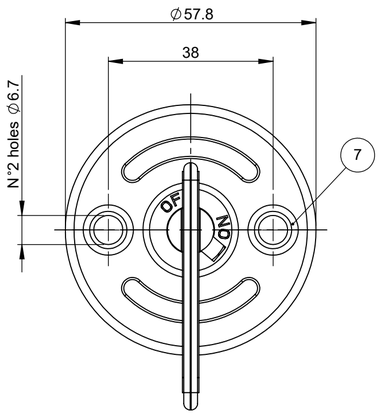

OPEN CONTACT

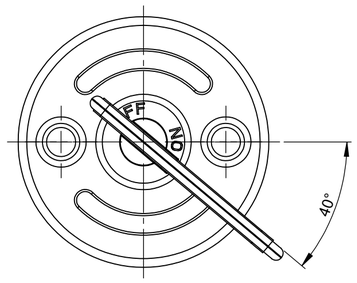

PLUGGING IN-PULL OUT KEY

POS.	DESCRIPTION	MATERIAL	QTY.	U/M
8	Key no logo red complete		1	EA
7	Eyelet	Iron	1	EA
6	Nut M10	Brass	4	EA
5	Spring washer	Bronze	2	EA
4	Washer 10.3x18x2		2	EA
3	Upper body cam double	Polyamide	1	EA
2	Power stud M10	Copper	2	EA
1	Lower body M10 cont.-holder hole	Polyamide	1	EA

CHARACTERISTICS AND PRESCRIPTIONS

-Nominal voltage: 24V max
-Maximum continuos current: 150A
-Maximum current: 1000A for 5sec at 25°C
-Maximum short time current: 450A for 4.5 minutes
-Tightening torque M10 nuts ref. 7±1Nm

SAP drawing number:

Material and treatments:

DIMENSIONS AND TOLERANCES IN MILLIMETERS, DEFINED ACCORDING TO ISO 1101-2017.

linear dimensions						
0,5 3	>3 6	>6 30	>30 120	>120 400	>400 1000	>1000 2000
±0,2	±0,3	±0,5	±0,8	±1,2	±2	±3

angle (for range of lengths)			
up to 10	>10 50	>50 120	>120 400
±1°30'	±1°	±0°30'	±0°15'

●	FIT/ FUNCTION CRITICAL CHARACTERISTICS SYMBOL
<S>	SAFETY/ COMPLIANCE CRITICAL CHARACTERISTICS SYMBOL
CPK	DENOTES CPK DIMENSIONS MINIMUM CPK VALUE
ST	DENOTES A CHARACTERISTIC THAT PROVIDES AN INDICATION OF PROCESS PERFORMANCE.PROCEDURE FOR MEASUREMENTAND TRACKINGTO BE DEFINED IN LITTELFUSE INSPECTION INSTRUCTIONS
CP	DENOTES CP DIMENSIONS. -MINIMUM CP VALUE MUST BE WITHIN THE DIMENSIONAL LIMITATIONS SHOWN ON DRAWING AND INITIALLY LOCATED TO ALLOW FOR MAXIMUM TOOL LIFE

	NAME	DATE
DRAWN	L. Dal Molin	05-Apr-19
CHECKED	-	-
	-	-
	-	-

FORM NO: CVP-PE40-0013 REV A

FIRST ANGLE PROJECTION

Littelfuse
Expertise Applied | Answers Delivered

TITLE
BATTERY MAIN SWITCH IGC-150 (N°2 M10)

SIZE: A2 | DWG. NO. OL-08098780 | OUTLINE | REV. A

DO NOT SCALE DRAWING | SCALE 1:1 | SHEET 1 OF 1