PART NUMBER	"A"	"B"	"C"	"D"	LEAD "A" COLOR	LEAD "B" COLOR	INSULATION TYPE	WIRE SIZE
0FHJ1001G	102.0	102.0	9.0	9.0	RED	RED	GXL (STANDARD)	10 AWG
0FHJ1002G	102.0	102.0	9.0	9.0	RED	RED	GXL (STANDARD)	8 AWG

LTR	DATE	REVISION	CHK	APD
A	11/19/09	000847ER-RELEASED CAD		
B	08/17/12	505869ECA-REMOVAL OF MOUNTING HOLE OPL		

NOTES:

1. HOLDER MATERIAL: BLACK TPV 251 80W 232
2. CONTACTS: C194 COPPER ALLOY: TIN-PLATED
3. WIRE: SEE CHART
4. CRIMP: MUST MEET SAE/USCAR 21 STANDARD
5. MAX TEMPERATURE 125C
6. FUSEHOLDERS SHOULD NOT BE PLACES UNDER TENSION IN FINAL APPLICATION.

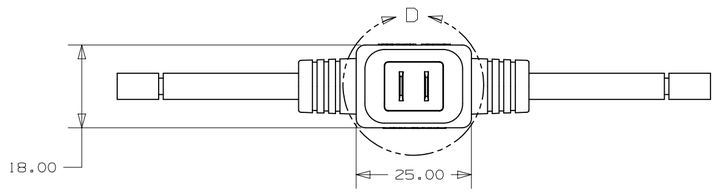

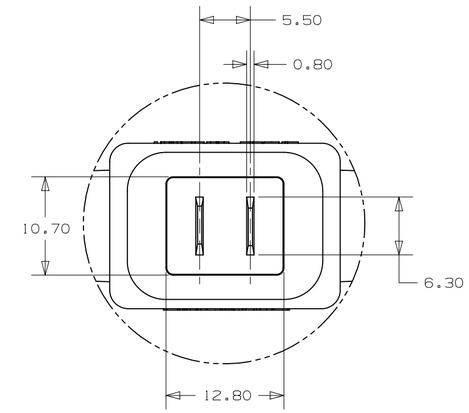

DETAIL D
SCALE 2:1

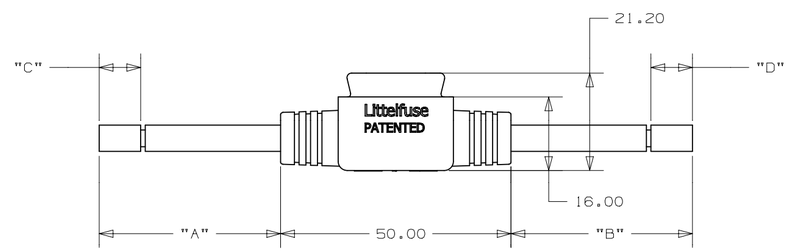

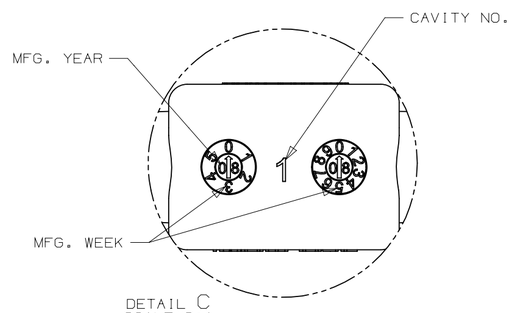

DETAIL C
SCALE 2:1

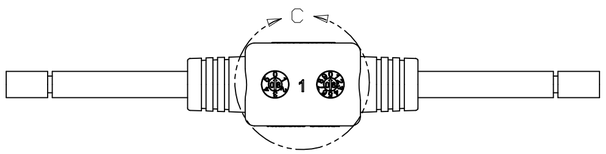

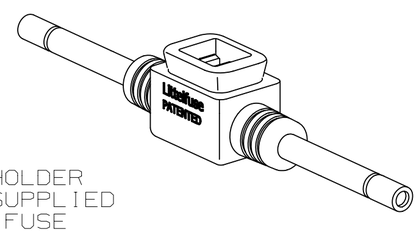

FUSEHOLDER
NOT SUPPLIED
WITH FUSE

METRIC
ASSEMBLY

UNLESS OTHERWISE SPECIFIED, DIMENSIONS ARE IN MILLIMETERS.
DIMENSIONS IN BRACKETS [ ] ARE INCHES

UNLESS OTHERWISE SPECIFIED, DIMENSIONS DO NOT INCLUDE PLATING.

◎ DENOTES CRITICAL CHARACTERISTICS.

CPK DENOTES CPK DIMENSIONS, -MINIMUM CPK VALUE

ST DENOTES A CHARACTERISTIC THAT PROVIDES AN INDICATION OF PROCESS PERFORMANCE. PROCEDURE FOR MEASUREMENT AND TRACKING TO BE DEFINED IN LITTELFUSE INSPECTION INSTRUCTIONS

CP DENOTES CP DIMENSIONS, -MINIMUM CP VALUE MUST BE WITHIN THE DIMENSIONAL LIMITATIONS SHOWN ON DRAWING AND INITIALLY LOCATED TO ALLOW FOR MAXIMUM TOOL LIFE

COPIES TO

1	9	18
2	10	19
3	12	20
4	13	21
5	14	23
6	15	33
7	16	43
8	17	53

MATL SPEC

FINISH

DRW CAD	DATE 11/19/09	SCALE 1:1
CHK	DATE	SUPER DR
APPD	DATE	FINSH GOOD WT GRAMS/PIECE

TOLERANCES UNLESS OTHERWISE SPECIFIED (REF. ISO 2768-mK)

DIMENSION	0.5 - 3 (UP TO)	3 - 6 (OVER / UP TO)	6 - 30 (OVER / UP TO)	30 - 120 (OVER / UP TO)	120 - 400 (OVER / UP TO)
TOLERANCE	±0.1	±0.1	±0.2	±0.3	±0.5

3RD ANGLE PROJECTION

TITLE HOLDER - JCASE W/O COVER, STANDARD

Littelfuse®
DES PLAINES, ILLINOIS 60016

REVISION B

DRWG. NO. OL-0FHJ1000G

CAD GENERATED DRAWING - NO PENCIL CHANGES ALLOWED