PART NUMBER	"A"	"B"	"C"	"D"	LEAD "A" COLOR	LEAD "B" COLOR	LEAD "A" SIZE	LEAD "B" SIZE	LEAD "A" STRIP	LEAD "B" STRIP	INSULATION TYPE
OFHM0003ZXJP-F5	94±3 [3.70±0.12]	94±3 [3.70±0.12]	5.5±0.3 [0.22±0.01]	5.5±0.3 [0.22±0.01]	BLACK	BLACK	18 AWG	18 AWG	PARTIAL	PARTIAL	TXL

LTR	DATE	REVISION	CHK	APD
A	4/10/15	511762GCA - NEW RELEASE FYUE		

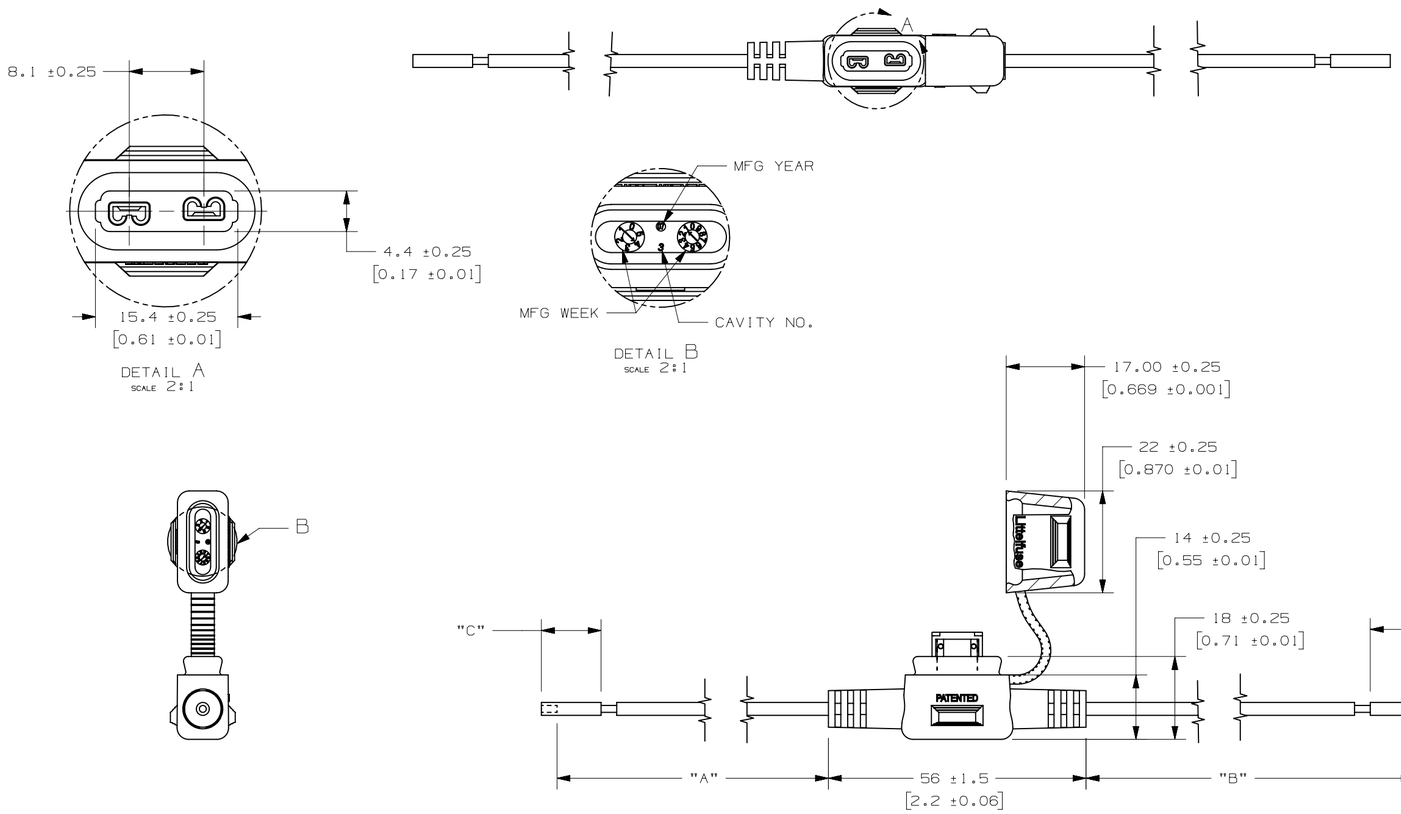

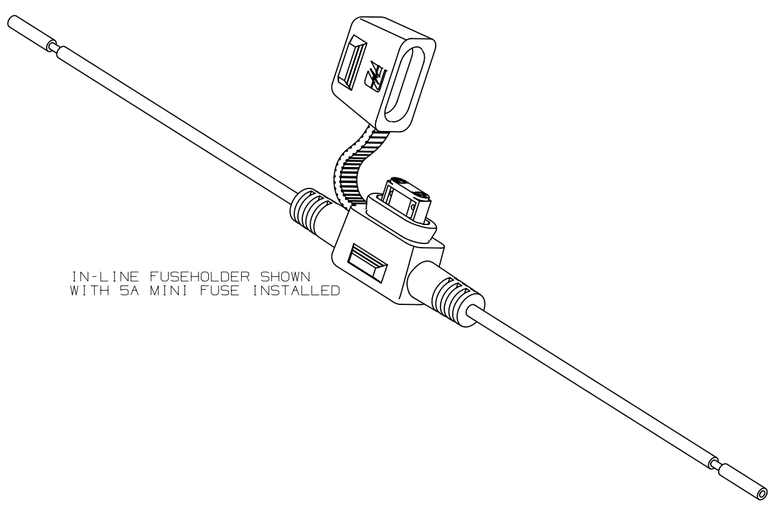

IN-LINE FUSEHOLDER SHOWN
WITH 5A MINI FUSE INSTALLED

NOTES:
1. HOLDER MATERIAL: BLACK TPV
2. CONTACTS: C194 COPPER ALLOY: TIN-PLATED
3. WIRE: STRANDED COPPER, 125°C RATED, 18AWG TXL WIRE
4. CRIMP: MUST MEET SAE/USCAR 21 STANDARD
5. FUSE RATING: 5A, 32Vdc
6. FUSEHOLDERS SHOULD NOT BE PLACED UNDER TENSION IN FINAL APPLICATION
7. MAX TEMPERATURE 125°C
8. THE HOLDER IS SHIPPED WITH COVER CLOSED

METRIC

UNLESS OTHERWISE SPECIFIED, DIMENSIONS ARE IN MILLIMETERS.
DIMENSIONS IN BRACKETS [ ] ARE INCHES

UNLESS OTHERWISE SPECIFIED, DIMENSIONS DO NOT INCLUDE PLATING.

◎	DENOTES CRITICAL CHARACTERISTICS.
CPK	DENOTES CPK DIMENSIONS, -MINIMUM CPK VALUE
ST	DENOTES A CHARACTERISTIC THAT PROVIDES AN INDICATION OF PROCESS PERFORMANCE. PROCEDURE FOR MEASUREMENT AND TRACKING TO BE DEFINED IN LITTELFUSE INSPECTION INSTRUCTIONS
CP	DENOTES CP DIMENSIONS, -MINIMUM CP VALUE MUST BE WITHIN THE DIMENSIONAL LIMITATIONS SHOWN ON DRAWING AND INITIALLY LOCATED TO ALLOW FOR MAXIMUM TOOL LIFE

COPIES TO

1	9	18
2	10	19
3	12	20
4	13	21
5	14	23
6	15	33
7	16	43
8	17	53

MATL SPEC SEE NOTES		
FINISH SEE NOTES		
DRW FYUE	DATE 04/10/15	SCALE 1:1
CHK	DATE	SUPER DR
APPD	DATE	FINSH GOOD WT GRAMS/PIECE

TOLERANCE UNLESS OTHERWISE SPECIFIED
ONE PLACE DEC +/-.3
TWO PLACE DEC +/-.15
THREE PLACE DEC +/-.100
ANGULAR +/-1°

3RD ANGLE PROJECTION

TITLE MINI IN-LINE FUSEHOLDER WITH 5A FUSE

Littelfuse®
DES PLAINES, ILLINOIS 60016

REVISION	DRWG. NO.	OUTLINE
A	OL-OFHM0003ZXJP-F5	

CAD GENERATED DRAWING – NO PENCIL CHANGES ALLOWED