Revision Control Record

Rev.	Description of Change	ECN No.	Date
A	NEW PART RELEASE	03443	10/09/03
B	ALL HARDWARE ASSBLD; PN'S DROPPED FROM CHART	13188	08/18/13

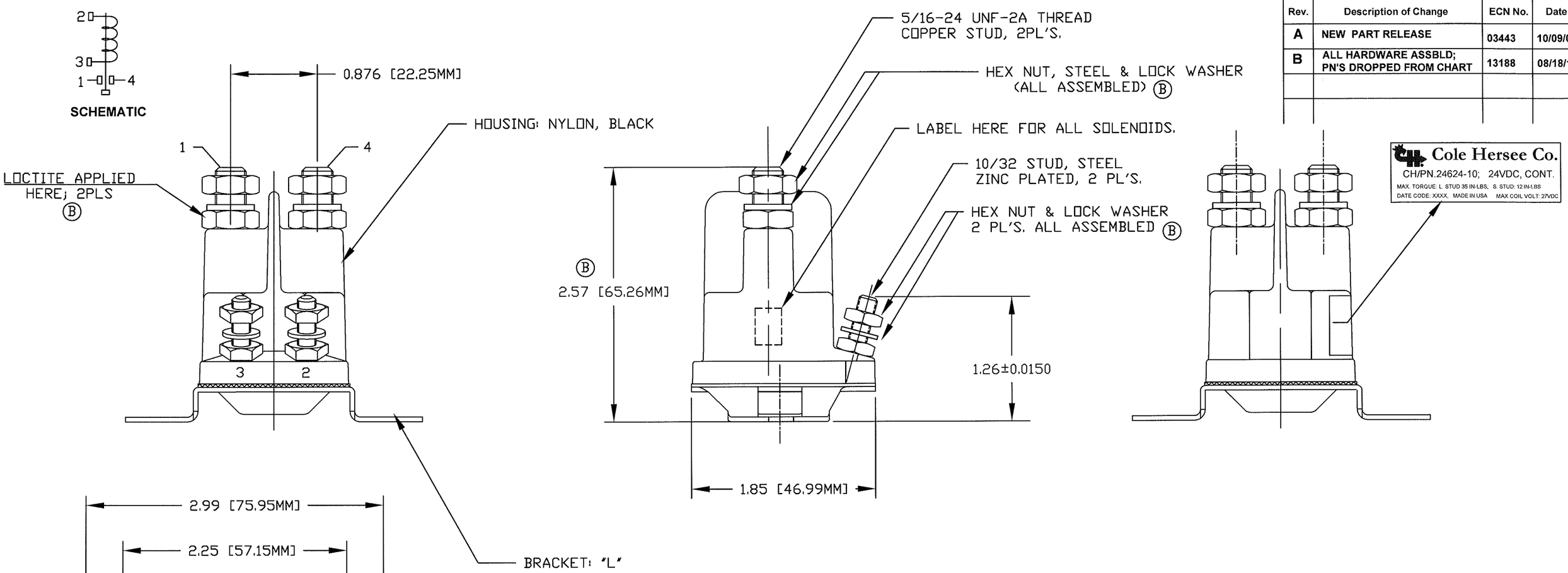

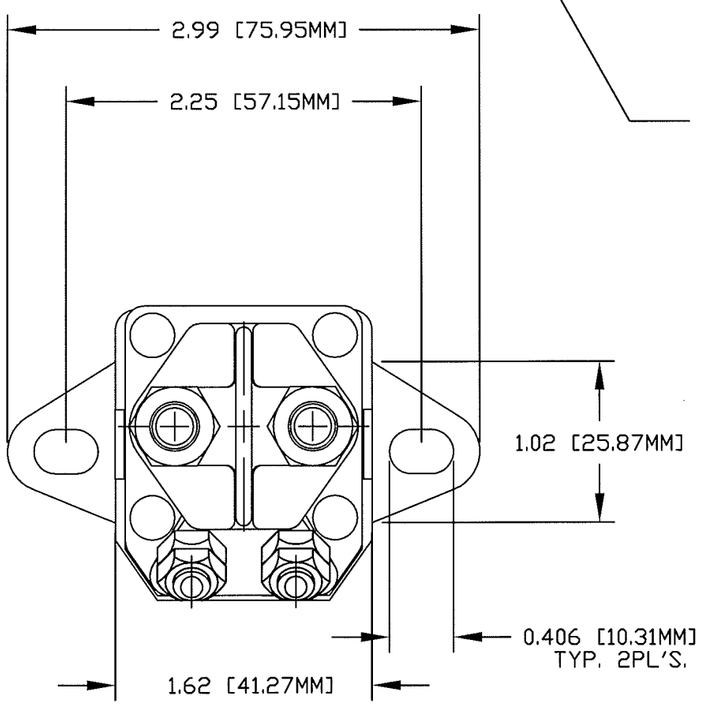

NOTES:
1. ALL DIMENSIONS ARE REFERENCE.
2. ALL STEEL PARTS ARE ZINC PLATED. HOUSING MATERIAL: NYLON, GLASS REINFORCED.
3. CONT. DUTY COIL RESISTANCE @ 25°C: : 76 OHMS
4. SILVER CONTACT CONTINUOUS CURRENT CARRYING CAPACITY: 100 AMPS. INRUSH: 400 AMPS,
5. LIFE CYCLE: 50K CYCLES
6. HARDWARE: ALL HARDWARE IS SHIPPED ASSEMBLED.
(B)7. OPERATING TEMPERATURE: -40°C TO 59°C. (-40 TO 140°F)
8. ENVIRONMENTAL RATING: IP6X
9: HARDWARE TORQUE FOR CABLE ASSEMBLY: 35 IN-LBS MAX 5/16 NUTS; 12 IN-LBS MAX FOR 10/32 NUTS.

Tolerances Unless otherwise specifically noted, the following are default tolerances;
* 2-place Decimal Dimensions +/- .02"
* 3-place Decimal Dimensions +/- .005"
* Angular Dimensions +/- 1.0 Deg.
* Metric: Refer to equivalent English Dimension Tolerance

>>> NOTE: *All tolerances are Non-Cumulative.* <<<

Dimensional Units All dimensions are expressed in inches except those shown in brackets (xxx) are expressed in millimeters

"REF." or an Asterisk (*) = Non-Toleranced Reference Dimension, shown for clarification purposes only.

PROPRIETARY INFORMATION This Engineering Drawing, and the information contained herein, is proprietary to Cole Hersee Company and may not be disclosed, re-produced, or in any other way transferred or communicated to any other party without the express written consent of an authorized representative of Cole Hersee Company.

DESIGN CONTROL It is the responsibility of the individual using / referencing this drawing to assure that the noted design revision level agrees with the revision level of the Controlled Document (Master Drawing). This is a NON-CONTROLLED DOCUMENT unless otherwise specifically noted.

DO NOT SCALE - Dimensional variation may occur during printing / reproduction.

Special Characteristics:

- (CC) Critical Characteristic, relating to Safety and/or Regulatory Compliance
- (X) Significant Characteristic relating to Process Control (SPC)
- (KC) Key Characteristic relating to Form - Fit - Function as defined by Cole Hersee Company and/or the Customer

(Note that the identification of any Characteristics as being "Special" does not alter the requirement that ALL specificed dimensions & tolerances must be met.)

Cole Hersee Co.
20 Old Colony Ave., South Boston, MA, 02127
Phn: 617-268-2100 Web: www.colehersee.com

Used On or Ref.: EX27922-B12	Scale: 1:1	Drawn By: G. AUGUSTE	Date Drawn: 05/02/03	Responsible Engineer: G. AUGUSTE	Pg. 1 OF 1

Description: **SOLENOID, 24V, SPST,N.O**

Drawing / Part No.: **24624-10** Current Rev. **B**