MM	IN
25	010
5 58	220
15 74	.620
18.03	710
22 60	890
28 44	1.120
31 75	1 250

5066

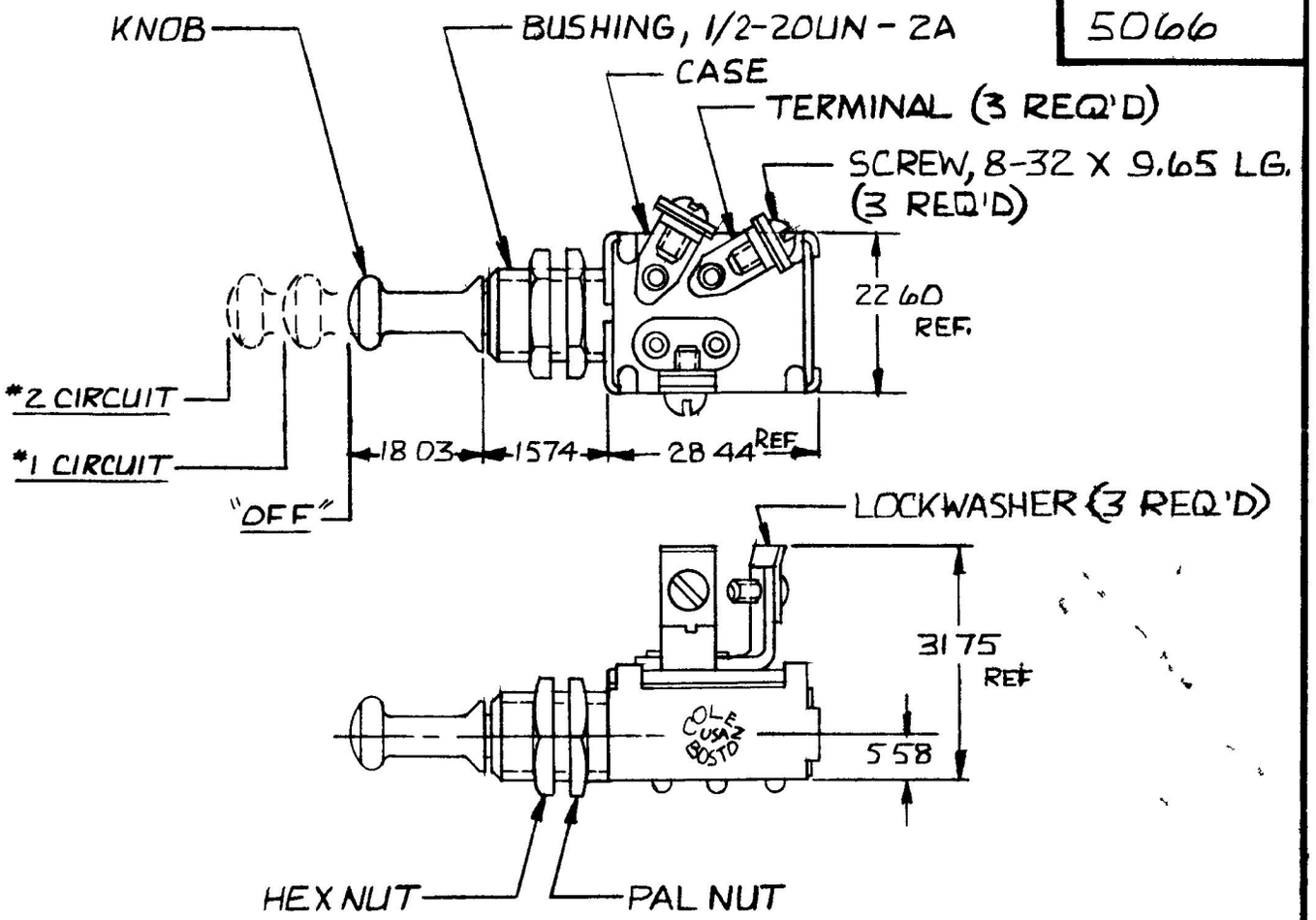

NOTES:

1. 8 AMPS @ 12V DC
2. ALL STEEL PARTS PLATED

METRIC

DO NOT SCALE

LET	WAS	DATE	BY	LET	WAS	DATE	BY	MATERIAL	DRAWN	CHECKED	APPRV D	SCALE		DATE DRAWN
								—	DS	RA		1:1		1-20-48
								FINISH —	Cole Hersee Co.					DATE BLUEPRINT
								TOLERANCES DECIMAL ± METRIC ± 25	PUSH-PULL SWITCH					5066
				P	REDRAWN	12980	R							

CH 188(4 78)

Confidential Property of Cole Hersee