TEST

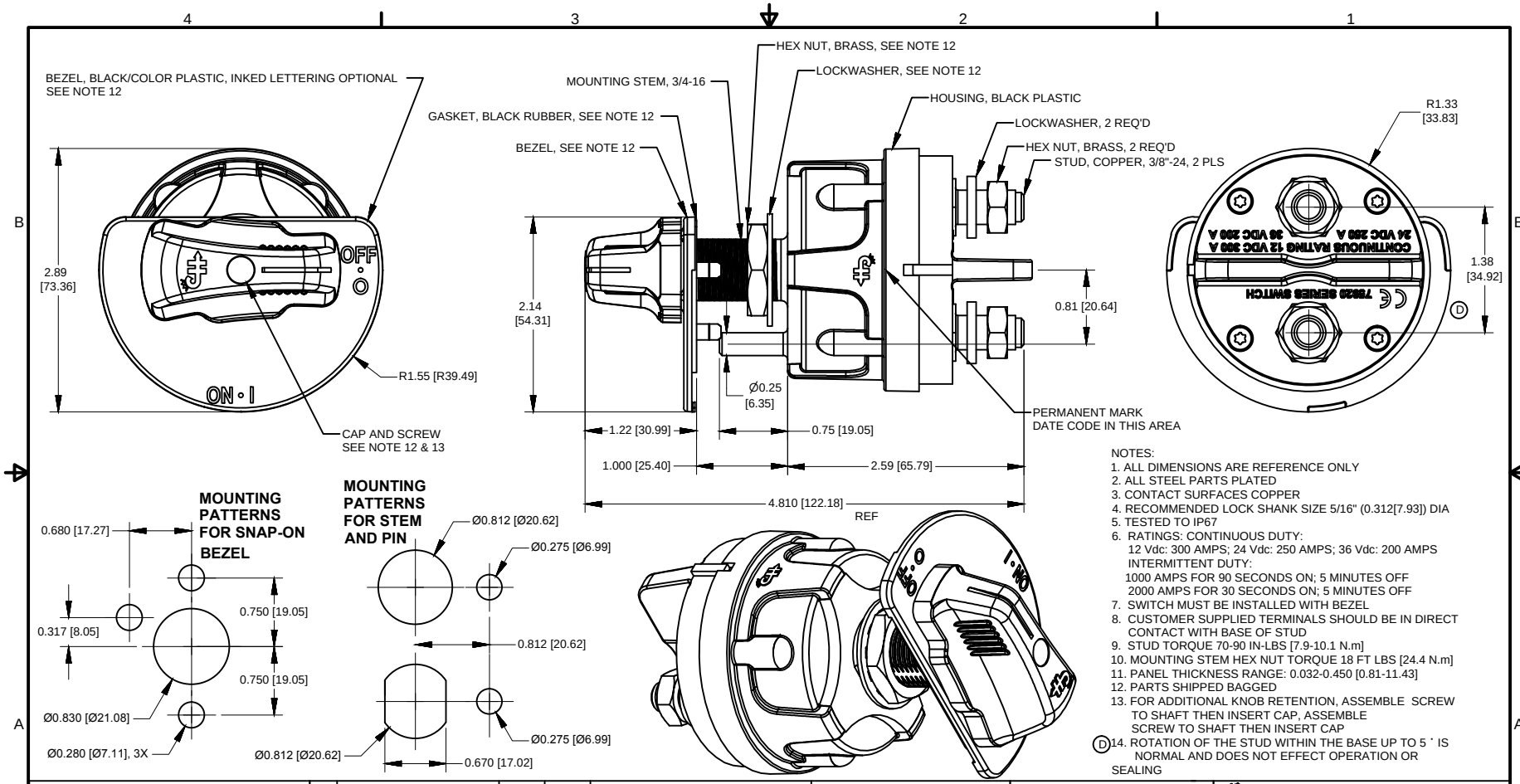

NOTES:
1. ALL DIMENSIONS ARE REFERENCE ONLY
2. ALL STEEL PARTS PLATED
3. CONTACT SURFACES COPPER
4. RECOMMENDED LOCK SHANK SIZE 5/16" (0.312[7.93]) DIA
5. TESTED TO IP67
6. RATINGS: CONTINUOUS DUTY:
   12 Vdc: 300 AMPS; 24 Vdc: 250 AMPS; 36 Vdc: 200 AMPS
   INTERMITTENT DUTY:
   1000 AMPS FOR 90 SECONDS ON; 5 MINUTES OFF
   2000 AMPS FOR 30 SECONDS ON; 5 MINUTES OFF
7. SWITCH MUST BE INSTALLED WITH BEZEL
8. CUSTOMER SUPPLIED TERMINALS SHOULD BE IN DIRECT CONTACT WITH BASE OF STUD
9. STUD TORQUE 70-90 IN-LBS [7.9-10.1 N.m]
10. MOUNTING STEM HEX NUT TORQUE 18 FT LBS [24.4 N.m]
11. PANEL THICKNESS RANGE: 0.032-0.450 [0.81-11.43]
12. PARTS SHIPPED BAGGED
13. FOR ADDITIONAL KNOB RETENTION, ASSEMBLE SCREW TO SHAFT THEN INSERT CAP, ASSEMBLE SCREW TO SHAFT THEN INSERT CAP
(D) 14. ROTATION OF THE STUD WITHIN THE BASE UP TO 5 ˚ IS NORMAL AND DOES NOT EFFECT OPERATION OR SEALING

Revision Control Record

Rev.	Description of Change	ECN No.	Date
A	INITIAL RELEASED	09346	05/21/09
B	CHANGED SCREWS, GASKET, O-RING	11268	08/02/11
C	CHANGE TO IP68	12252	08/09/12
D	ADD CE MARK & NOTE	09525	09/30/13

Rev.	Description of Change	ECN No.	Date

Tolerances Unless otherwise specifically noted, the following are default tolerances;

2-places	3-places	Angular
+/- 0.02"	+/- 0.005"	+/- 1˚

Metric: Shown in [ ] refers to equivalent English Dim Tol

"REF." or an Asterisk (*) = Non-Toleranced Reference Dimension, shown for clarification purposes only.

NOTE: *All tolerances are Non-Cumulative.*

PROPRIETARY INFORMATION This Engineering Drawing, and the information contained herein, is proprietary to Cole Hersee Company and may not be disclosed, re-produced, or in any other way transferred or communicated to any other party without the express written consent of an authorized representative of Cole Hersee Company.

Special Characteristics:
- (CC) Critical Characteristic, relating to Safety and/or Regulatory Compliance
- (X) Significant Characteristic relating to Process Control
- (KC) Control Dimension relating to Form - Fit - Function as defined by Cole Hersee Company and/or the Customer

Cole Hersee Co.
20 Old Colony Ave., South Boston, MA, 02127
Phn: 617-268-2100 Web: www.colehersee.com

Description: MASTER DISC SW-SPECIAL KNOB

Drawing / Part No.: 75920-02

Current Rev.: D

FORM CHT-6 (2/07) | Used On or Ref.: EX28660 | Scale: 1:1 | Drawn By: CN | Date Drawn: 05/21/09 | Pg. 1 of 1