REF. 81258

81260

81260 - 06	LIGHTS
81260 - 05	SIGNAL
81260 - 04	CLUTCH
81260 - 03	HEADER CLUTCH
81260 - 02	REAR LIGHT
81260 - 01	HEAD LIGHTS
81260	NONE
PART NO.	IMPRINT

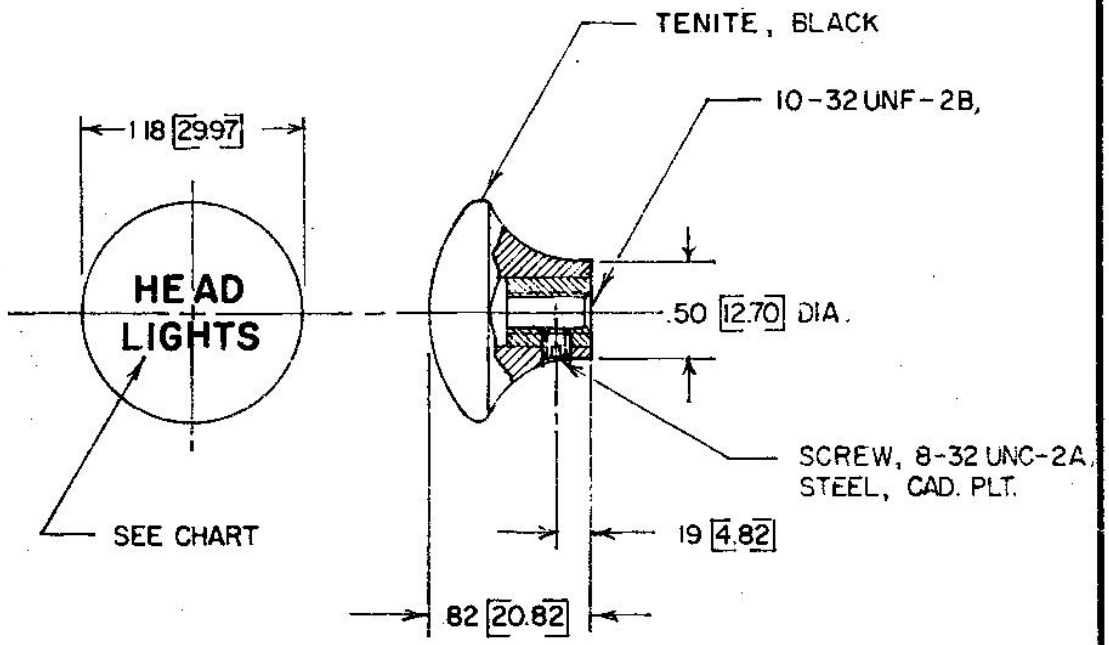

Confidential Property of Cole Hersee

DIMENSIONS: INCHES [MILLIMETERS]

DO NOT SCALE

LET	WAS	DATE	BY	LET	WAS	DATE	BY
				E	REDRAWN	1-12-79	[illegible]

MATERIAL	DRAWN	CHECKED	APPRV'D.	SCALE	DATE DRAWN
NOTED	MF	[illegible] 1-15-79		1:1	8-20-65
FINISH: BLACK	Cole Hersee Co. 36 OLD COLONY AVENUE, SOUTH BOSTON, MA. U.S.A. 02127				DATE BLUEPRINT
TOLERANCES: FRACTIONAL ± ; DECIMAL ± .010	KNOB				81260

CH 188 (4-78)