MM	IN
4.26	.168
5.76	.227
6.52	.257
15.74	.620
16.00	.630
19.30	.760
20.06	.790
44.09	1.736
38.1	1.500
26.19	1.469
3.96	.156

8486

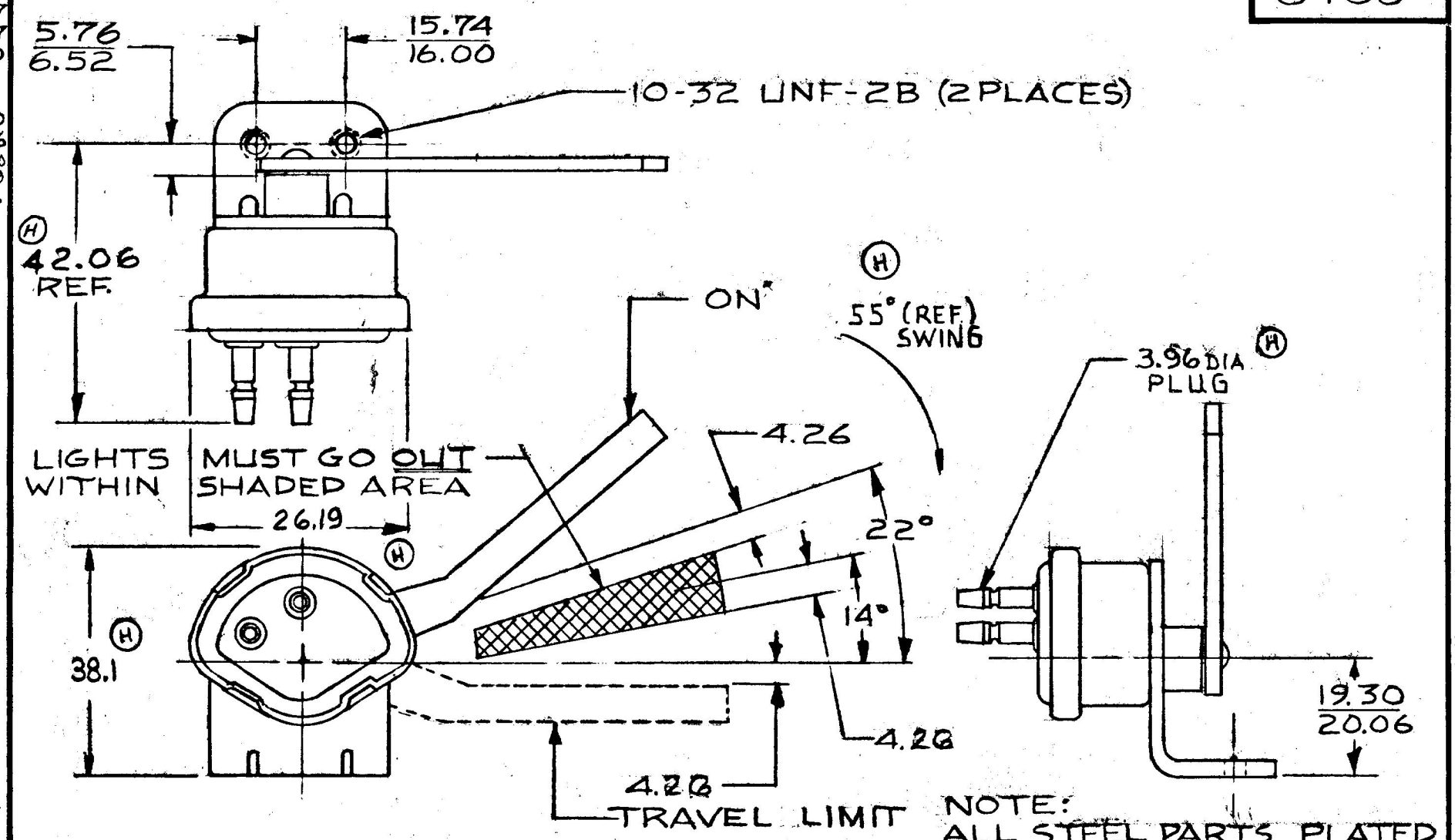

NOTE: ALL STEEL PARTS PLATED

RATED CONTACT CURRENT 4.2-4.6 AMPS
MAX. OPERATING FORCE 3LBS

METRIC

DO NOT SCALE

LET.	WAS	DATE	BY	LET	WAS	DATE	BY	MATERIAL	DRAWN	CHECKED	APPRV'D.	SCALE	DATE DRAWN
								— " —	FHG	RJH		1:1	10-26-54
								FINISH	Cole Hersee Co. 20 OLD COLONY AVENUE SOUTH BOSTON, MA. U.S.A. 02127				DATE BLUEPRINT
								NOTED					
				H	ECN 23516	5/15/87	RF	TOLERANCES	MECH. STOP LIGHT SWITCH				8486
				G	REDRAWN REV 21303	1-30-81	WB	DECIMAL ± .010 METRIC ± .25					

CH-188(4-78)

Confidential Property of Cole Hersee