CAD GENERATED DRAWING - NO PENCIL CHANGES ALLOWED

PART NUMBER	DIM "b"	DIM "a"	COLOR
868-906	Ø10.0	Ø4.4	GREY

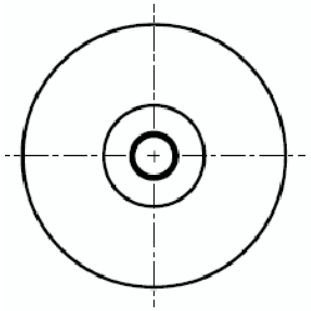

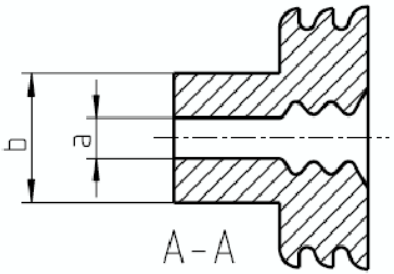

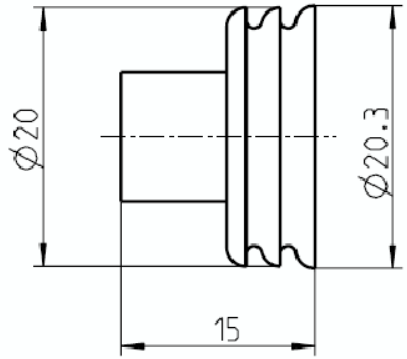

METRIC

COMPONENT

UNLESS OTHERWISE SPECIFIED, DIMENSIONS ARE IN MILLIMETERS
DIMENSIONS IN BRACKETS [ ] ARE INCHES
UNLESS OTHERWISE SPECIFIED, DIMENSIONS DO NOT INCLUDE PLATING.

◎	DENOTES CRITICAL CHARACTERISTICS.
CPK	DENOTES CPK DIMENSIONS, -MINIMUM CPK VALUE
ST	DENOTES A CHARACTERISTIC THAT PROVIDES AN INDICATION OF PROCESS PERFORMANCE. PROCEDURE FOR MEASUREMENT AND TRACKING TO BE DEFINED IN LITTELFUSE INSPECTION INSTRUCTIONS
CP	DENOTES CP DIMENSIONS, -MINIMUM CP VALUE MUST BE WITHIN THE DIMENSIONAL LIMITATIONS SHOWN ON DRAWING AND INITIALLY LOCATED TO ALLOW FOR MAXIMUM TOOL LIFE

BILL OF MATERIAL

NO	COMPONENT NO	DESCRIPTION	QTY/M	U/M

MATL SPEC: SILCON RUBBER, SHORE 45±5

FINISH

COPIES TO: 1 9 18 / 2 10 19 / 3 12 20 / 4 13 21 / 5 14 23 / 6 15 33 / 7 16 43 / 8 17 53

DRW	GMB	DATE 03/20/09	SCALE N/A
CHK		DATE	SUPER DR
APPD		DATE	FINSH GOOD WT GRAMS/PIECE

TOLERANCES UNLESS OTHERWISE SPECIFIED DIN 7715-M2

3RD ANGLE PROJECTION

TITLE: WIRE SEAL FOR Ø6-10mm

Littelfuse® DES PLAINES, ILLINOIS 60016

REVISION: A

DRWG. NO. 868-906

OUTLINE

LTR	DATE	REVISION	CHK	APD
A	03/20/09	00838ER-RELEASE GMB		