THIS DRAWING AND THE INFORMATION CONTAINED WITHIN IT ARE CONFIDENTIAL AND MAY NOT BE COPIED OR DISCLOSED WITHOUT THE WRITTEN PERMISSION OF LITTELFUSE.

REVISIONS

ZONE	REV.	DESCRIPTION	DATE	APPROVED
	A	PER EC# 500000009472: INITIAL RELEASE	9/13/2013	V.BELOUS
	B	EC# 523207: ADD NOTE 6 AND 7	1/7/2021	L. ARGIL

NOTES: (UNLESS OTHERWISE SPECIFIED)

1. ASSOCIATED CAD FILE DEFINES ALL NONDIMENSIONED FEATURES.
2. PRODUCT WEIGHT: 0.18kg (0.4Lb)
3. RECOMMENDED STUD TORQUE: 20Nm (15Lb-ft)
4. MAXIMUM STUD TORQUE: 30 Nm (22Lb-ft)
5. CONSULT LITTELFUSE FOR CUSTOM FUSE LOADING VARIATIONS.
6. (B) MOUNTING TORQUE FOR M6 HOLES: 5-8 N-m (3.7-5.9 lb-ft)
7. (B) IMPORTANT!- WHEN ATTACHING CABLES TO THE CONNECTION STUDS, THE RING TERMINAL MUST MAKE FIRM ELECTRICAL CONTACT WITH THE SURFACE OF THE BUS BAR. THE BUS BAR IS THE MAIN ELECTRICAL CONDUCTOR, AND THE STUDS AS WELL AS THE HEX NUTS ARE USED ONLY TO KEEP A FIRM ELECTRICAL CONNECTION. MAKE SURE THAT BOTH, BUS BARS AND RING TERMINAL ARE CLEAN AND FREE OF ANY CONTAMINATION.

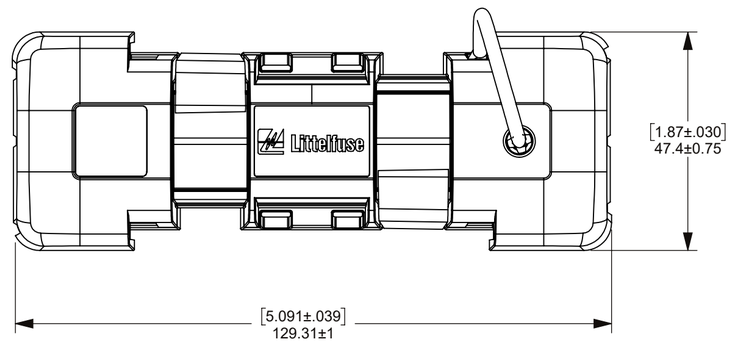

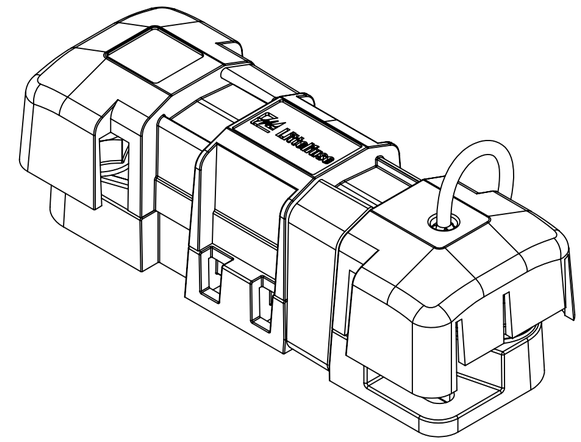

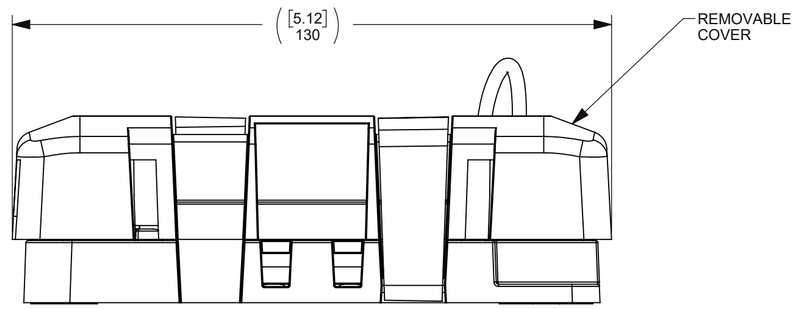

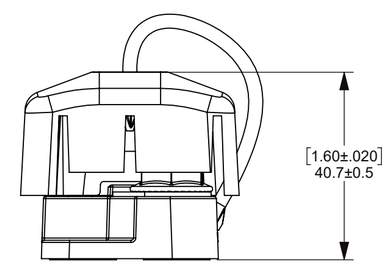

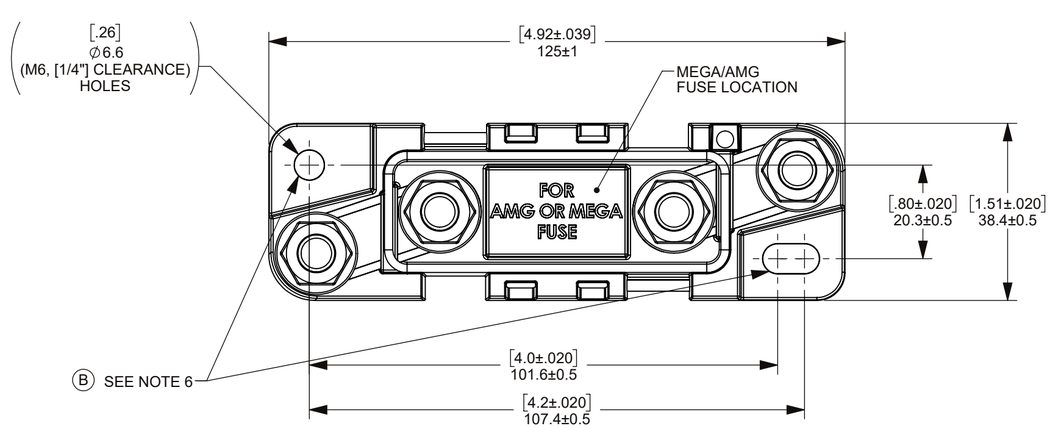

TOP VIEW COVER REMOVED

DIMENSIONS ARE SHOWN IN MILLIMETERS. DIMENSIONS AND TOLERANCES ARE DEFINED ACCORDING TO ANSI/ASME Y14.5-1994.

●	FIT FUNCTION CRITICAL CHARACTERISTICS SYMBOL
<S>	SAFETY/ COMPLIANCE CRITICAL CHARACTERISTICS SYMBOL
CPK	DENOTES CPK DIMENSIONS MINIMUM CPK VALUE
⟨ST⟩	DENOTES A CHARACTERISTIC THAT PROVIDES AN INDICATION OF PROCESS PERFORMANCE.PROCEDURE FOR MEASUREMENTAND TRACKINGTO BE DEFINED IN LITTELFUSE INSPECTION INSTRUCTIONS
CP	DENOTES CP DIMENSIONS, -MINIMUM CP VALUE MUST BE WITHIN THE DIMENSIONAL LIMITATIONS SHOWN ON DRAWING AND INITIALLY LOCATED TO ALLOW FOR MAXIMUM TOOL LIFE

DIMENSION; MM TOLERANCES UNLESS OTHERWISE SPECIFIED
ONE PLACE DECIMAL ± 0.5 THREE PLACES DECIMAL ± 0.100
TWO PLACES DECIMAL ± 0.20 ANGULAR ± 2°

	NAME	DATE
DRAWN	V.BELOUS	9/13/2013
CHECKED	-	-
	-	-
	-	-

FORM NO: CVP-PE40-0006 REV A

THIRD ANGLE PROJECTION

DO NOT SCALE DRAWING

Littelfuse®
Expertise Applied | Answers Delivered

TITLE
880014 OL DRAWING FUSE BLOCK SEALED MEGA-AMG
Part Number: 880014

SIZE	DWG. NO.	REV.
C	OL-880014	B

SCALE 1:1 SHEET 1 OF 1