THIS DRAWING AND THE INFORMATION CONTAINED WITHIN IT ARE CONFIDENTIAL AND MAY NOT BE COPIED OR DISCLOSED WITHOUT THE WRITTEN PERMISSION OF LITTELFUSE.

REVISIONS

ZONE	REV.	DESCRIPTION	DATE	APPROVED
	A	522970GCC NEW RELEASE DRAWING	04/MAR/2021	EDWARD J
	B	523692 ECC CHANGE THE MOLDED CONTENTS TO LASER MARKING	11/MAY/2021	EDWARD J

Voltage (Max.)	32VDC	Mounting Screw	Blade Fuse Isometric View
Input Terminal Rating	#10-32 Threaded Studs(100A Max)	2xM5xP0.8xL25	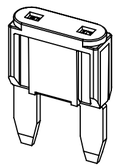
Output Terminal Rating	30A Max. Per Circuit		
Connection Pad Option Avaliable	Input Wire Size:#4-6 AWG		
	Output Wire Size:#12-16AWG	Terminal Dim	Blade Fuse Dim
Fuse Specifications	For Mini Blade Fuses Only	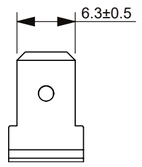	Mini SERIELS
Torqure Rating for Input Stud	2.25+0/-0.2Nm(20 in-lb)		
Mounting Torque Rating	0.9+0/-0.1Nm(8 in-lb)		
Temperature Rating	-20° C to +85°C		

Circuit Diagram

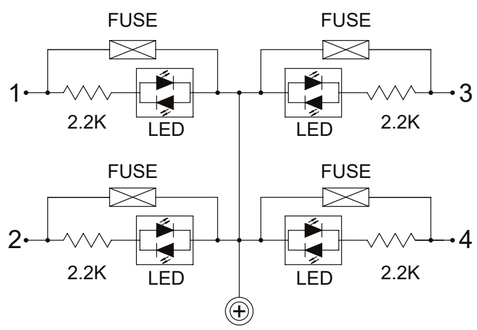

Power Input

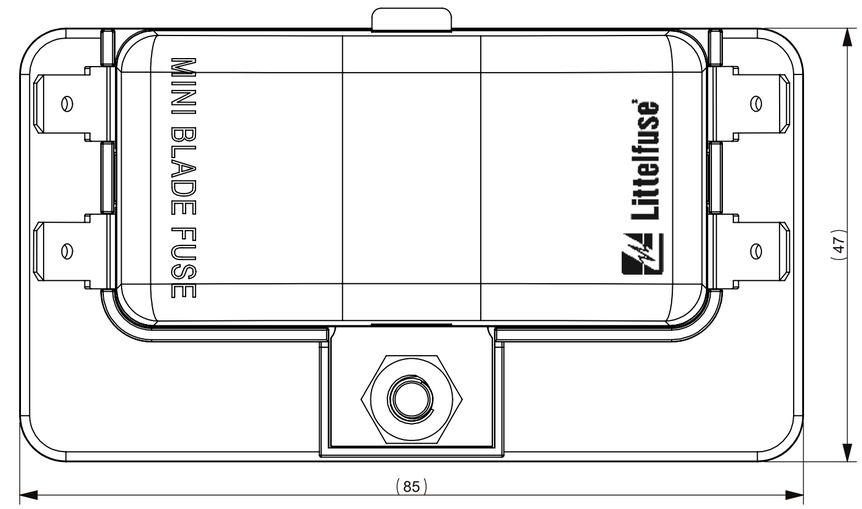

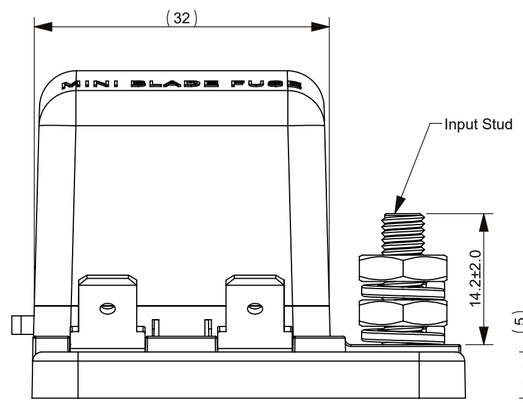

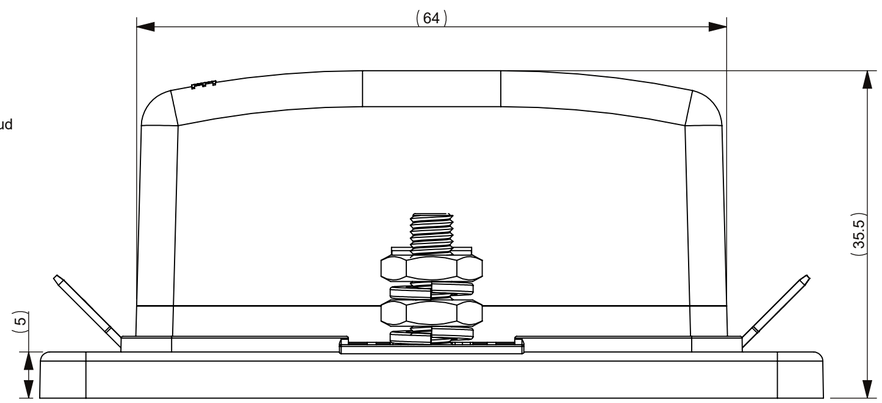

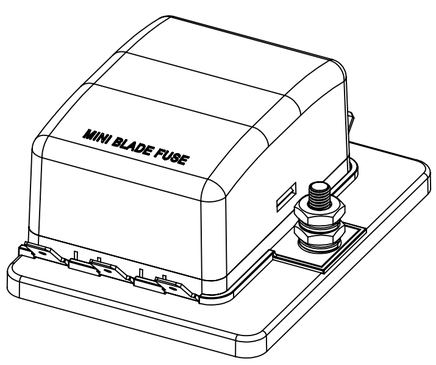

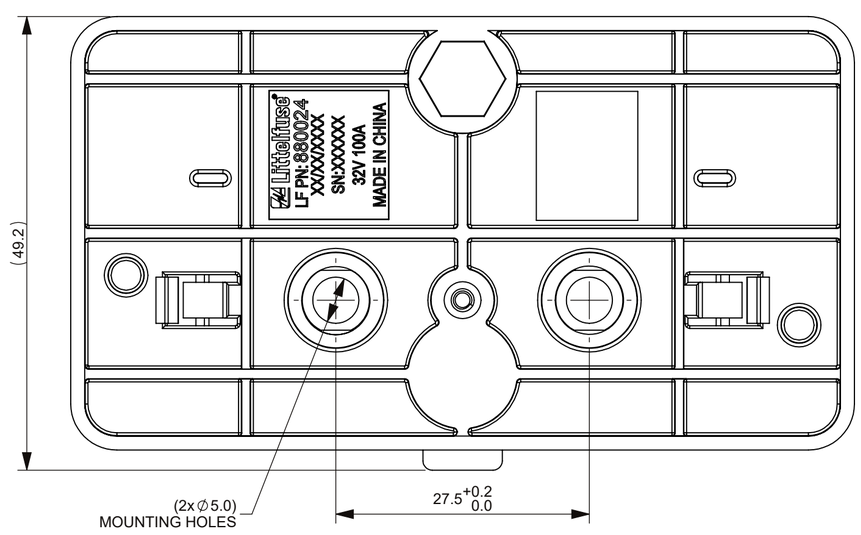

NOTES:
1. MATERIALS:
   BASE/HOUSING: BLACK PBT
   COVER: TRANSPEARANCE PC
   TERMINAL:TINNED COPPER
   PUSH BOTTOM:POM WHITE
2. FUSES ASSEMBLY BY HANDS.
3. ALL FUSES MUST NOT EXCEED 70% OF RATED CURRENT
4. RED LED INDICATES WHEN FUSE IS BROKEN.

DIMENSIONS ARE SHOWN IN MILLIMETERS. DIMENSIONS AND TOLERANCES ARE DEFINED ACCORDING TO ANSI/ASME Y14.5-1994.

●	FIT FUNCTION CRITICAL CHARACTERISTICS SYMBOL
<S>	SAFETY/ COMPLIANCE CRITICAL CHARACTERISTICS SYMBOL
CPK	DENOTES CPK DIMENSIONS MINIMUM CPK VALUE
(ST)	DENOTES A CHARACTERISTIC THAT PROVIDES AN INDICATION OF PROCESS PERFORMANCE.PROCEDURE FOR MEASUREMENTAND TRACKINGTO BE DEFINED IN LITTELFUSE INSPECTION INSTRUCTIONS
CP	DENOTES CP DIMENSIONS, -MINIMUM CP VALUE MUST BE WITHIN THE DIMENSIONAL LIMITATIONS SHOWN ON DRAWING AND INITIALLY LOCATED TO ALLOW FOR MAXIMUM TOOL LIFE

DIMENSION; MM TOLERANCES UNLESS OTHERWISE SPECIFIED
ONE PLACE DECIMAL ± 0.5 THREE PLACES DECIMAL ± 0.100
TWO PLACES DECIMAL ± 0.20 ANGULAR ± 2°

-	NAME	DATE
DRAWN	Sunny Pan	22/OCT/2020
CHECKED	Jason Li	22/OCT/2020
	-	-
	-	-

FORM NO: CVP-PE40-0006 REV A

THIRD ANGLE PROJECTION

DO NOT SCALE DRAWING

Littelfuse®
Expertise Applied | Answers Delivered

TITLE
STD DUTY MINI PDM 4 POS

SIZE C | DWG. NO. OL-880024 | REV. B

SCALE 2:1 | SHEET 1 OF 1