MM	IN
5.84	.230
8.48	.334
8.55	.337
12.70	.500
22.22	.875
22.60	.890
30.48	1.200
165.10	6.500
1.0mm²	16GA

Confidential Property of Cole Hersee

91830-01

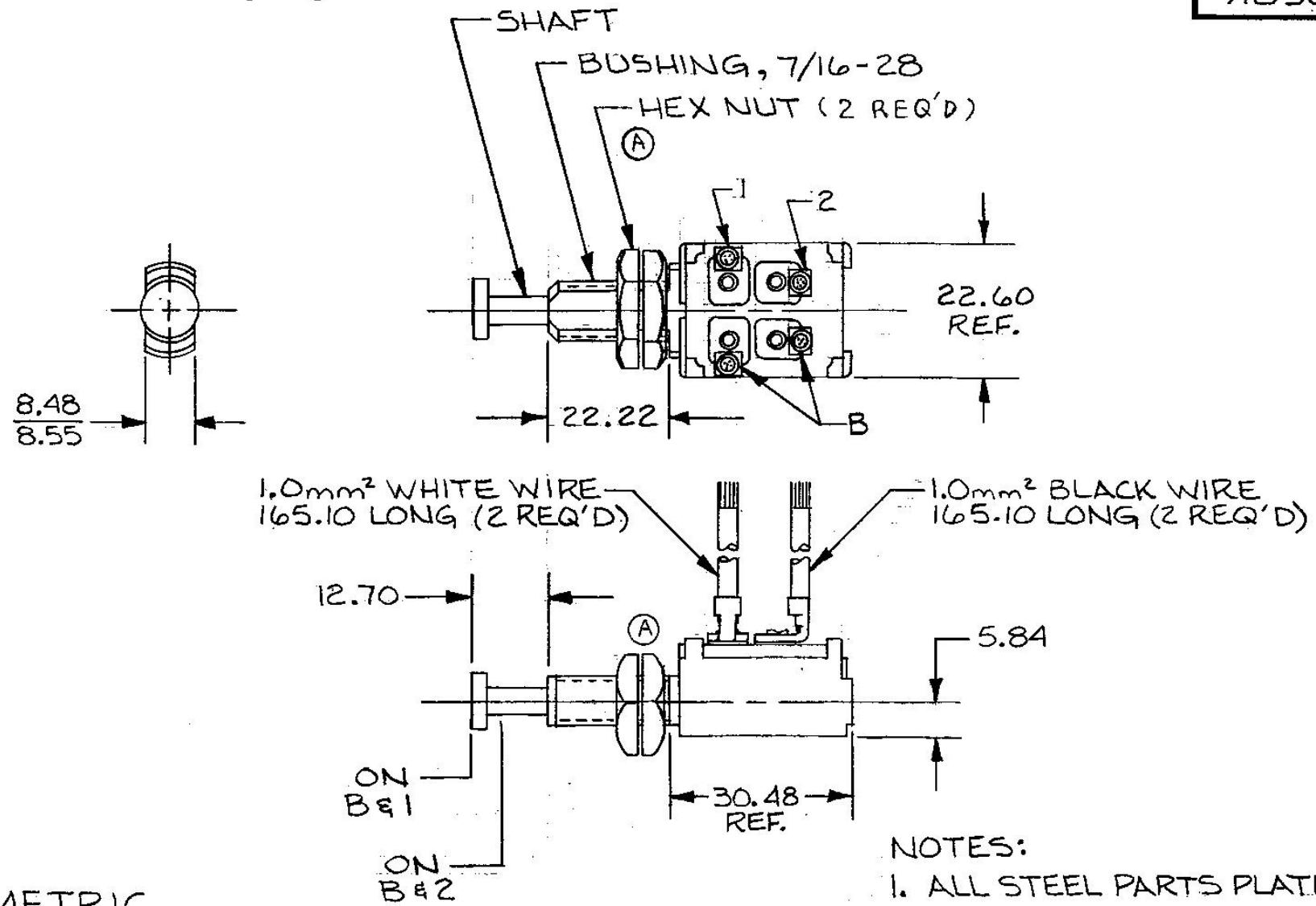

NOTES:
1. ALL STEEL PARTS PLATED

METRIC

DO NOT SCALE

EX 23328

LET.	WAS	DATE	BY	LET	WAS	DATE	BY
				A	ECN 24287	2/12/90	BL
					ISSUED	4/26/89	AF

MATERIAL	DRAWN	CHECKED	APPR'D.	SCALE	DATE DRAWN
	LIZ			1:1	1-6-89
FINISH	Cole Hersee Co.				DATE BLUEPRINT
TOLERANCES DECIMAL ±.010 METRIC ±.25	SWITCH, MOM., S.P.D.T				91830-01

BRUNING 40-21 63765

CH 198(4-79)