THIS DRAWING AND THE INFORMATION CONTAINED WITHIN IT ARE CONFIDENTIAL AND MAY NOT BE COPIED OR DISCLOSED WITHOUT THE WRITTEN PERMISSION OF LITTELFUSE.

PART NUMBER	DESCRIPTION	COLOR	FIGURE
923-025-001	3/8" STUD CAP	RED	2
923-025-002	3/8" STUD CAP	BLACK	2
923-025-003	M8 STUD CAP	RED	1
923-025-004	M8 STUD CAP	BLACK	1

REVISIONS

ZONE	REV.	DESCRIPTION	DATE	APPROVED
	A	PCO #5300217. INITIAL RELEASE. DSILVA.	2/23/2023	S. CASTILLO

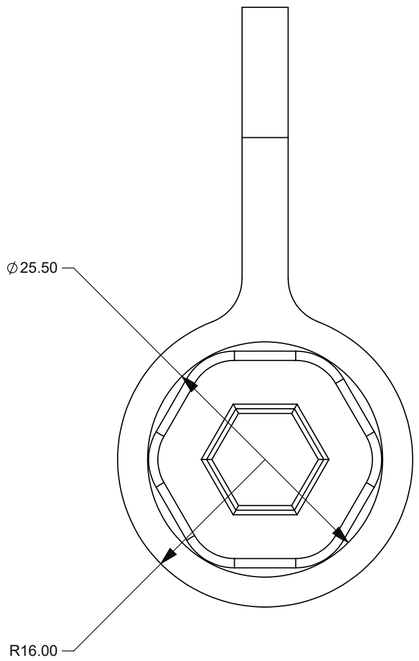

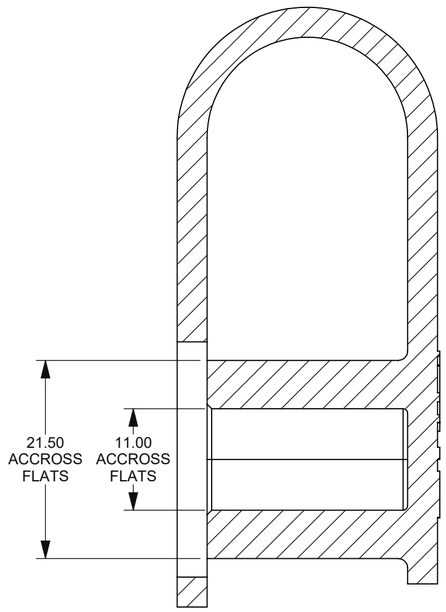

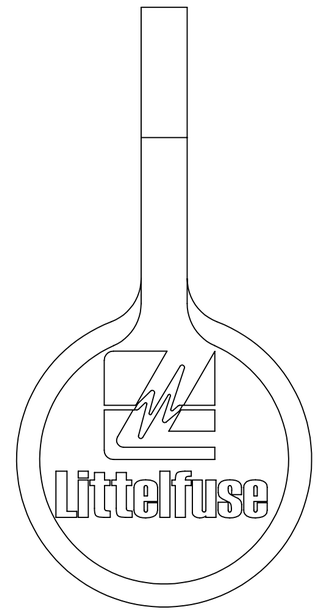

FIGURE 1. M8 STUD CAP

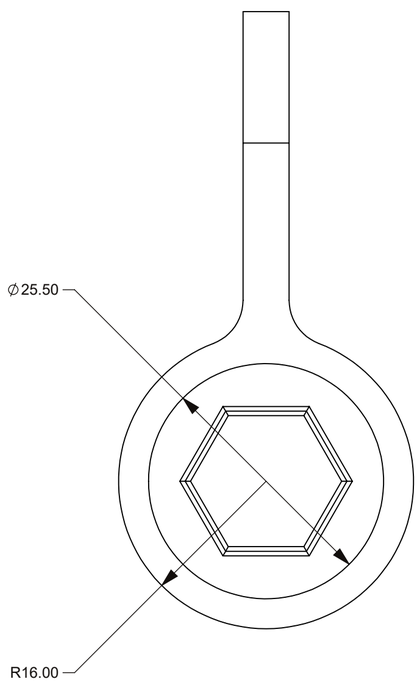

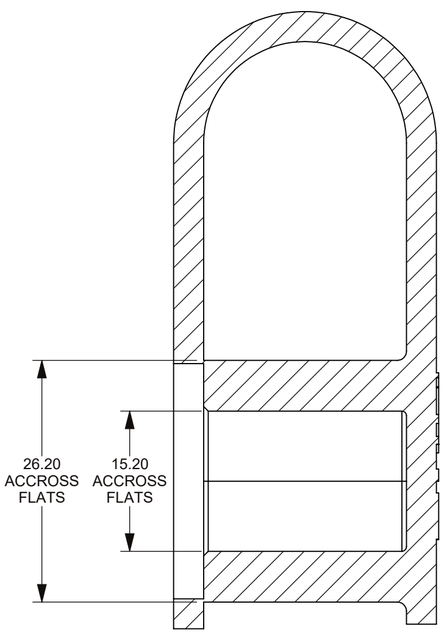

FIGURE 2. 3/8" STUD CAP

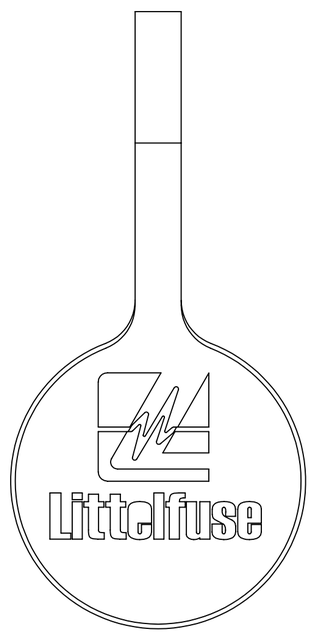

NOTES:
1. MATERIAL: SILICONE

NO.	COMPONENT NO.	COMPONENT NAME	QTY	U

TOLERANCES UNLESS OTHERWISE SPECIFIED (REF. ISO 2768-fH)

.5 to 3	>3 to 6	>6 to 30	>30 to 120	>120 to 400								ANGLE
±0.05	±0.05	±0.10	±0.15	±0.20								NONE

DIMENSIONS ARE SHOWN IN MILLIMETERS. DIMENSIONS AND TOLERANCES ARE DEFINED ACCORDING TO ANSI/ASME Y14.5-1994.

PER CHI-INPD20-0008 PROCEDURE

●	FIT/ FUNCTION CRITICAL CHARACTERISTICS
<S>	SAFETY/ COMPLIANCE CRITICAL CHARACTERISTICS SYMBOL
CPK	DENOTES CPK DIMENSIONS MINIMUM CPK VALUE
⟨ST⟩	DENOTES A CHARACTERISTIC THAT PROVIDES AN INDICATION OF PROCESS PERFORMANCE.PROCEDURE FOR MEASUREMENTAND TRACKINGTO BE DEFINED IN LITTELFUSE INSPECTION INSTRUCTIONS
CP	DENOTES CP DIMENSIONS. -MINIMUM CP VALUE MUST BE WITHIN THE DIMENSIONAL LIMITATIONS SHOWN ON DRAWING AND INITIALLY LOCATED TO ALLOW FOR MAXIMUM TOOL LIFE

	NAME	DATE
DRAWN	DSILVA	2/7/2023
CHECKED	S.CASTILLO	2/23/2023
	-	-
	-	-

FORM NO: CVP-PE40-0005 REV B

THIRD ANGLE PROJECTION

DO NOT SCALE DRAWING

Littelfuse®
Expertise Applied | Answers Delivered

TITLE
STUD CAPS

SIZE	DWG. NO.		REV.
C	OUTLINE	OL-923-025-000	A

SCALE 2:1 SHEET 1 OF 1