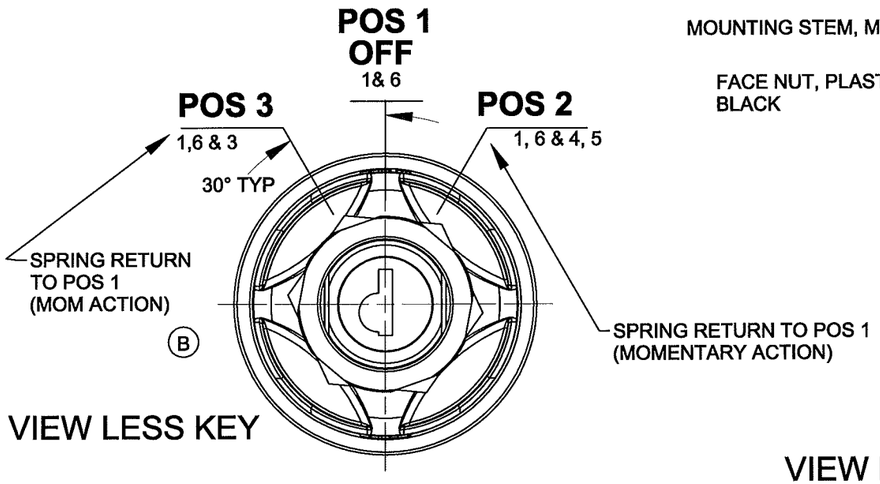

VIEW LESS KEY

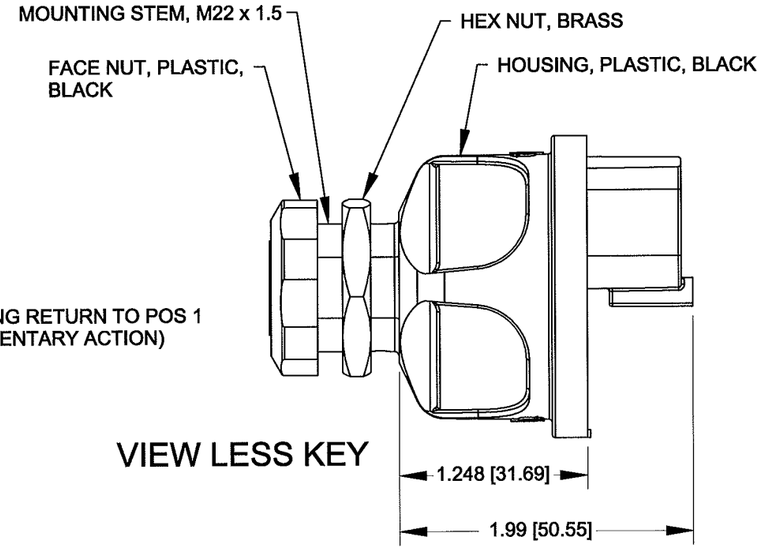

VIEW LESS KEY

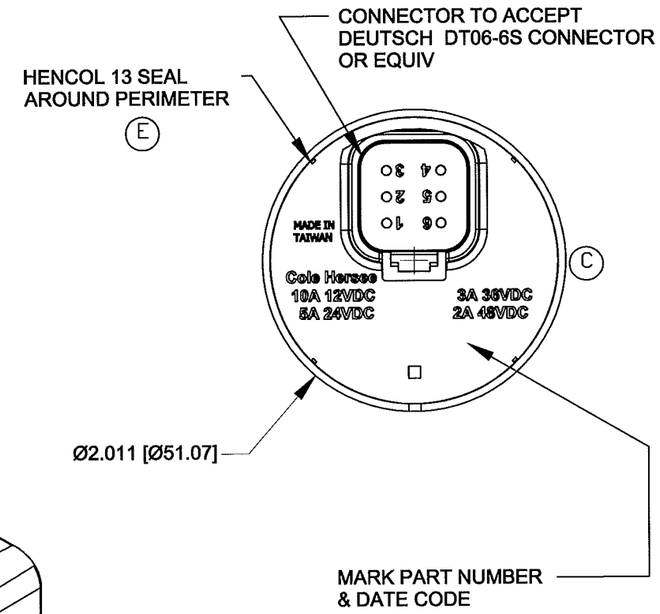

VIEW LESS
FACE NUT
& KEY

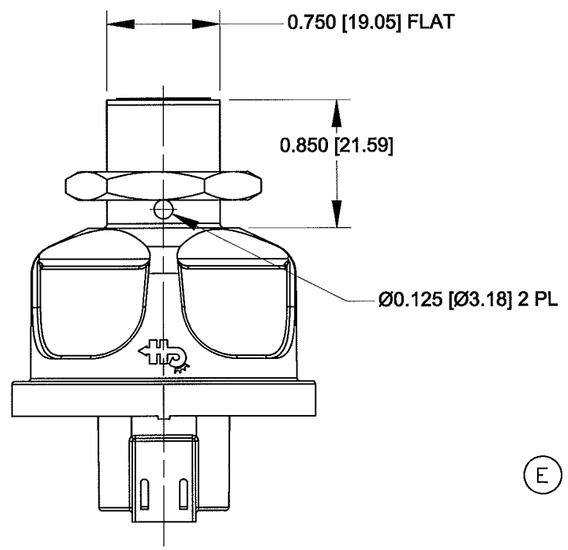

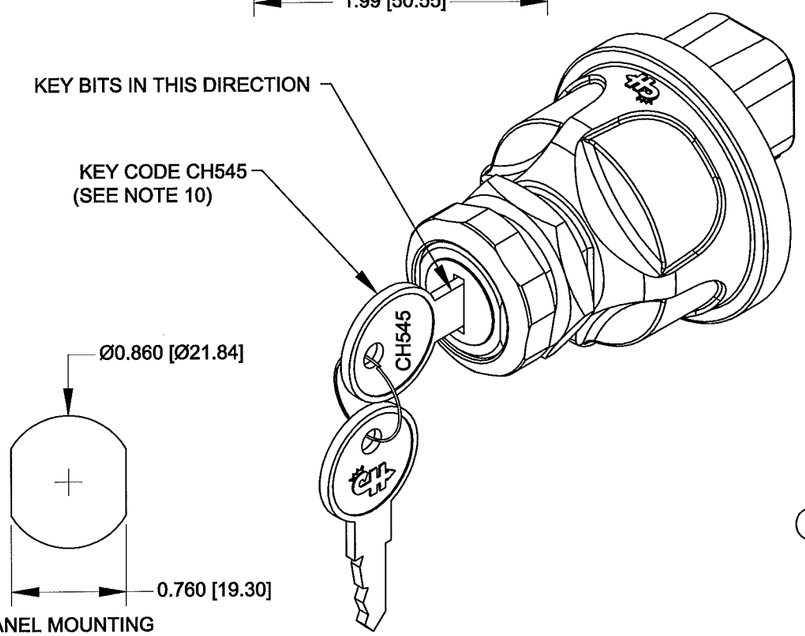

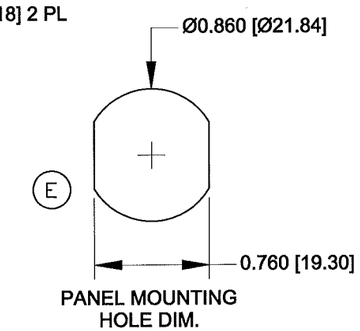

PANEL MOUNTING
HOLE DIM.

NOTES:
1. TOLERANCES PLUS OR MINUS 0.015 [0.38] UNLESS NOTED OTHERWISE
2. CONTACT AREA SEALED TO IP67
3. BACK OF SWITCH SEALED WHEN MATING CONNECTOR IS INSTALLED
4. RATING AT 12V dc RESISTIVE LOAD:
   CIRCUIT 10 AMPS
5. KEY REMOVEABLE IN OFF POSITION ONLY
6. MATERIALS: HOUSING BLACK THERMOPLASTIC
   INTERNAL STATIONARY CONTACTS COPPER
7. TERMINALS 1 & 6 CONNECTED TOGETHER INTERNALLY
8. TERMINALS 4 & 5 CONNECTED TOGETHER INTERNALLY
9. SWITCH TESTED TO SAE J259
10. KEY CODE CH545 (YALE Y13 KEY BLANK CUT TO KEY CODE CH545)
11. SW. MUST NOT BREAK CIRCUIT OR BE DAMAGED IF TORQUED TO 15 IN-LBS [1.69Nm] (E)
12. IF THE APPLICATION MOUNTS THE SWITCH WITH THE LOCK CYLINDER OR LEVER APPROACHING VERTICAL, CONTACT THE FACTORY FOR AN APPLICATION REVIEW AND POTENTIAL ALTERNATE PRODUCTS BEFORE DESIGN IS SET.

Revision Control Record

Rev.	Description of Change	ECN No.	Date
E	ADDED HENCOL 13; ADDED TORQUE NOTE	13166	6/17/13

Revision Control Record

Rev.	Description of Change	ECN No.	Date
A	RELEASED DRAWING	09402	7/31/09
B	REVISED KEY SLOT	09516	10/22/09
C	DELETED UL SYMBOL	10258	6/28/10
D	ADDED MADE IN TAIWAN	11215	7/15/11

Tolerances Unless otherwise specifically noted, the following are default tolerances;
* 2-place Decimal Dimensions +/- .02"
* 3-place Decimal Dimensions +/- .005"
* Angular Dimensions +/- 1.0 Deg.
* Metric: Refer to equivalent English Dimension Tolerance
  >>> NOTE: *All tolerances are Non-Cumulative.* <<<

Dimensional Units All dimensions are expressed in inches except those shown in brackets (xxx) are expressed in millimeters

"REF." or an Asterisk (*) = Non-Tolerenced Reference Dimension, shown for clarification purposes only.

Used On or Ref.: EX28527 | Scale: 1:1

PROPRIETARY INFORMATION This Engineering Drawing, and the information contained herein, is proprietary to Cole Hersee Company and may not be disclosed, re-produced, or in any other way transferred or communicated to any other party without the express written consent of an authorized representative of Cole Hersee Company.

DESIGN CONTROL It is the responsibility of the individual using / referencing this drawing to assure that the noted design revision level agrees with the revision level of the Controlled Document (Master Drawing). This is a NON-CONTROLLED DOCUMENT unless otherwise specifically noted.

DO NOT SCALE - Dimensional variation may occur during printing / reproduction.

Drawn By: JJC | Date Drawn: 1/09/09

Special Characteristics:
- CC Critical Characteristic, relating to Safety and/or Regulatory Compliance
- X Significant Characteristic relating to Process Control (SPC)
- KC Control Dimension relating to Form - Fit - Function as defined by Cole Hersee Company and/or the Customer

(Note that the identification of any Characteristics as being "Special" does not alter the requirement that ALL specified dimensions & tolerances must be met.)

Responsible Engineer: JJC | PAGE 1 Created using Autocad Inventor

Cole Hersee Co.
20 Old Colony Ave., South Boston, MA, 02127
Phn: 617-268-2100 Web: www.colehersee.com

Description: **SW, ROT, 3POS, PLSTC**

Drawing / Part No.: **95060-36**

Current Rev.: **E**