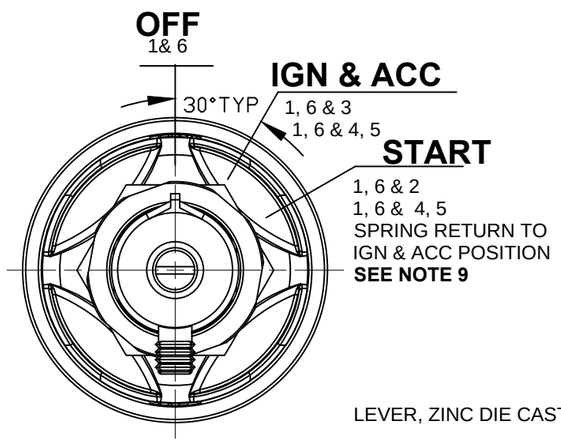

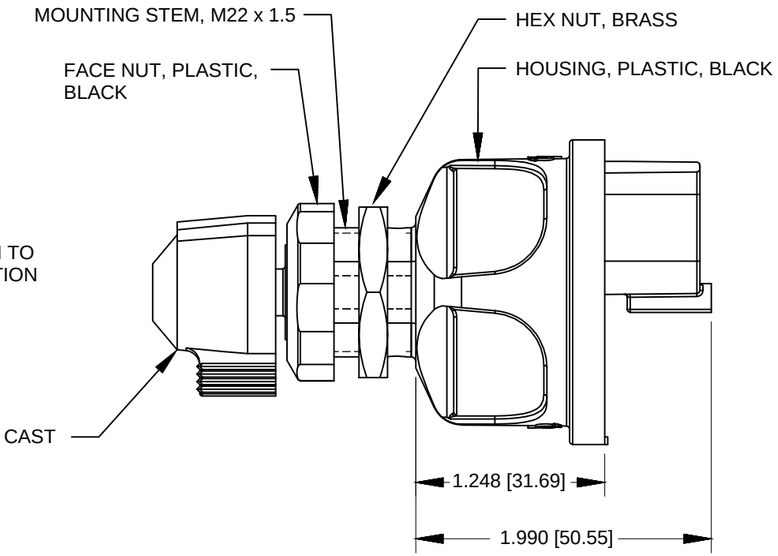

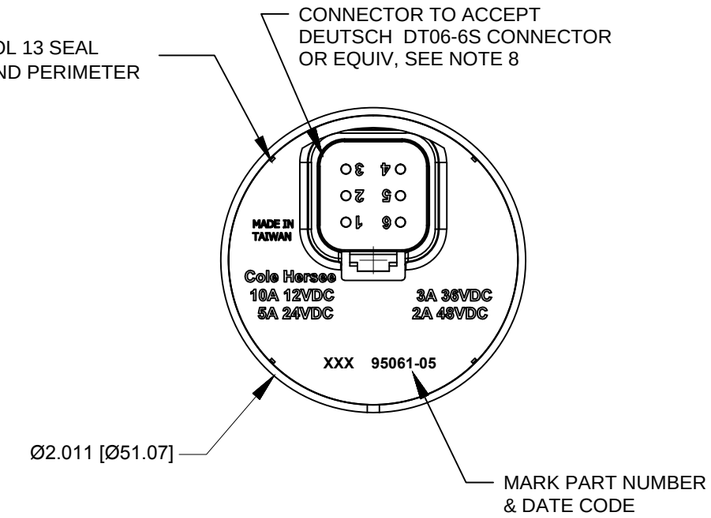

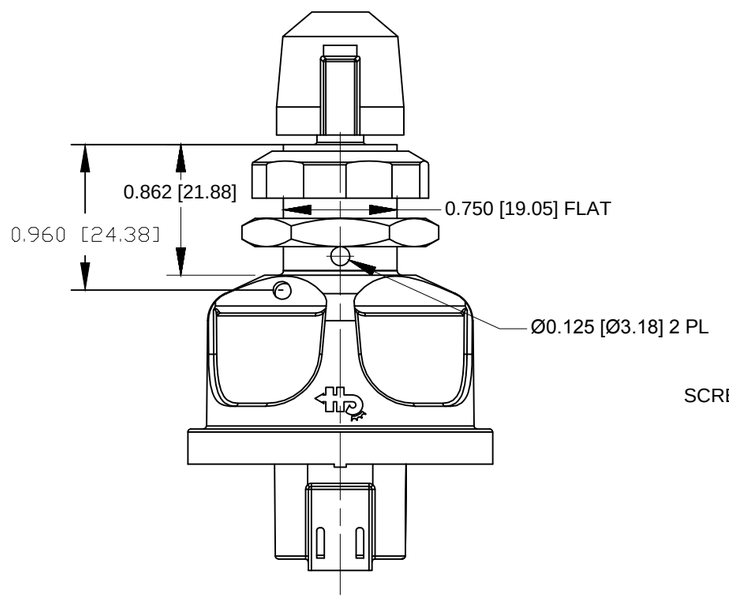

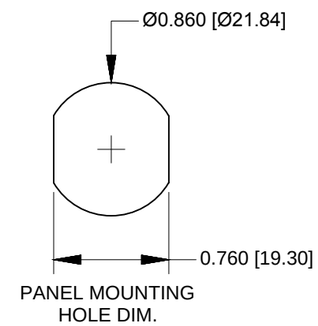

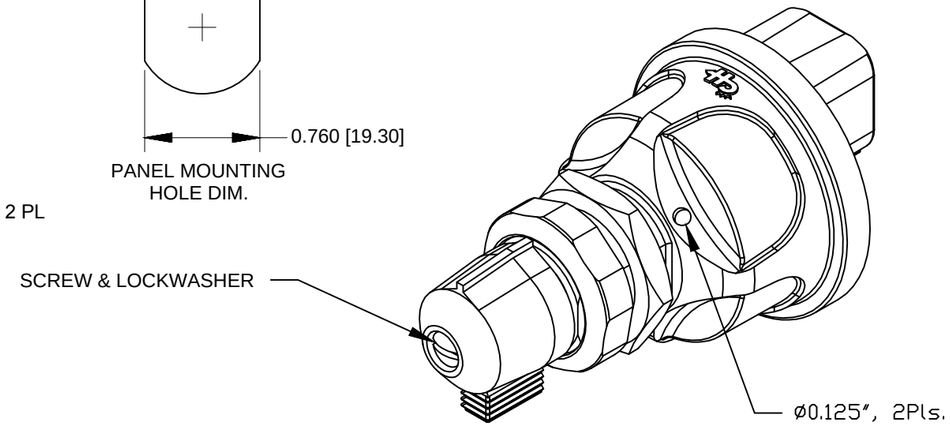

PIN NUMBER	CIRCUIT	12VDC RESISTIVE LOAD
2	START	5 AMPS
3	ACCESSARY	10 AMPS
4 & 5	IGNITION	10 AMPS
1 & 6	BATTERY	

PINS 1 & 6 CONNECTED TOGETHER INTERNALLY
PINS 4 & 5 CONNECTED TOGETHER INTERNALLY

NOTES:
1. TOLERANCES PLUS OR MINUS 0.015 [0.38]
2. CONTACT AREA SEALED TO IP67
3. BACK OF SWITCH SEALED WHEN MATING CONNECTOR IS INSTALLED
4. FOR RESISTIVE LOAD RATING SEE CHART OR BACK OF SWITCH
5. FOR PIN TERMINAL LOCATIONS & IDENTIFICATION SEE CHART
6. MATERIALS: HOUSING BLACK THERMOPLASTIC
   INTERNAL STATIONARY CONTACTS: COPPER
7. SWITCH TESTED TO SAE J259.
8. SW. MATES WITH COLE HERSEE 31101 CONNECTOR ASSEMBLY
9. START LOCKOUT FEATURE. SWITCH MUST GO TO "OFF" POSITION BEFORE THE START CIRCUIT CAN BE RE-ENERGIZED
10. SW. MUST NOT BREAK CIRCUIT OR BE DAMAGED IF SHAFT IS TORQUED TO 15 IN-LBS [1.69Nm]
11. SW. SAME AS 95061-04, EXCEPT TWO ADDITIONAL DRAIN HOLES ADDED.

Revision Control Record

Rev.	Description of Change	ECN No.	Date
A	RELEASED DRAWING	10768	7/25/14

Rev.	Description of Change	ECN No.	Date

Tolerances Unless otherwise specifically noted, the following are default tolerances;

2-places	3-places	Angular
+/- 0.02"	+/- 0.005"	+/- 1°

Metric: Shown in [ ] refers to equivalent English Dim Tol

"REF." or an Asterisk (*) = Non-Toleranced Reference Dimension, shown for clarification purposes only.

NOTE: *All tolerances are Non-Cumulative.*

PROPRIETARY INFORMATION
This Engineering Drawing, and the information contained herein, is proprietary to Cole Hersee Company and may not be disclosed, re-produced, or in any other way transferred or communicated to any other party without the express written consent of an authorized representative of Cole Hersee Company.

Special Characteristics:
- (CC) Critical Characteristic, relating to Safety and/or Regulatory Compliance
- [X] Significant Characteristic relating to Process Control
- (KC) Control Dimension relating to Form - Fit - Function as defined by Cole Hersee Company and/or the Customer

Cole Hersee Co.
20 Old Colony Ave., South Boston, MA, 02127
Phn: 617-268-2100 Web: www.colehersee.com

Description: SW,ROT,IGN,PLSTC

Drawing / Part No.: 95061-05 **Current Rev.** A

FORM CHT-6 (2/07) | Used On or Ref.: 95061-04 | Scale: 1:1 | Drawn BY: G.Auguste | Date Drawn: 7/22/14 | Pg. 1 of 1