MM	IN
20.57	.81
35.81	1.41
36.57	1.44

APPLICABLE SAE STANDARD OR RECOMMENDED PRACTICE SAE J259

9577

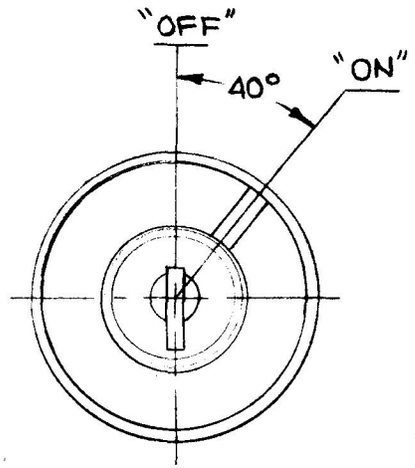

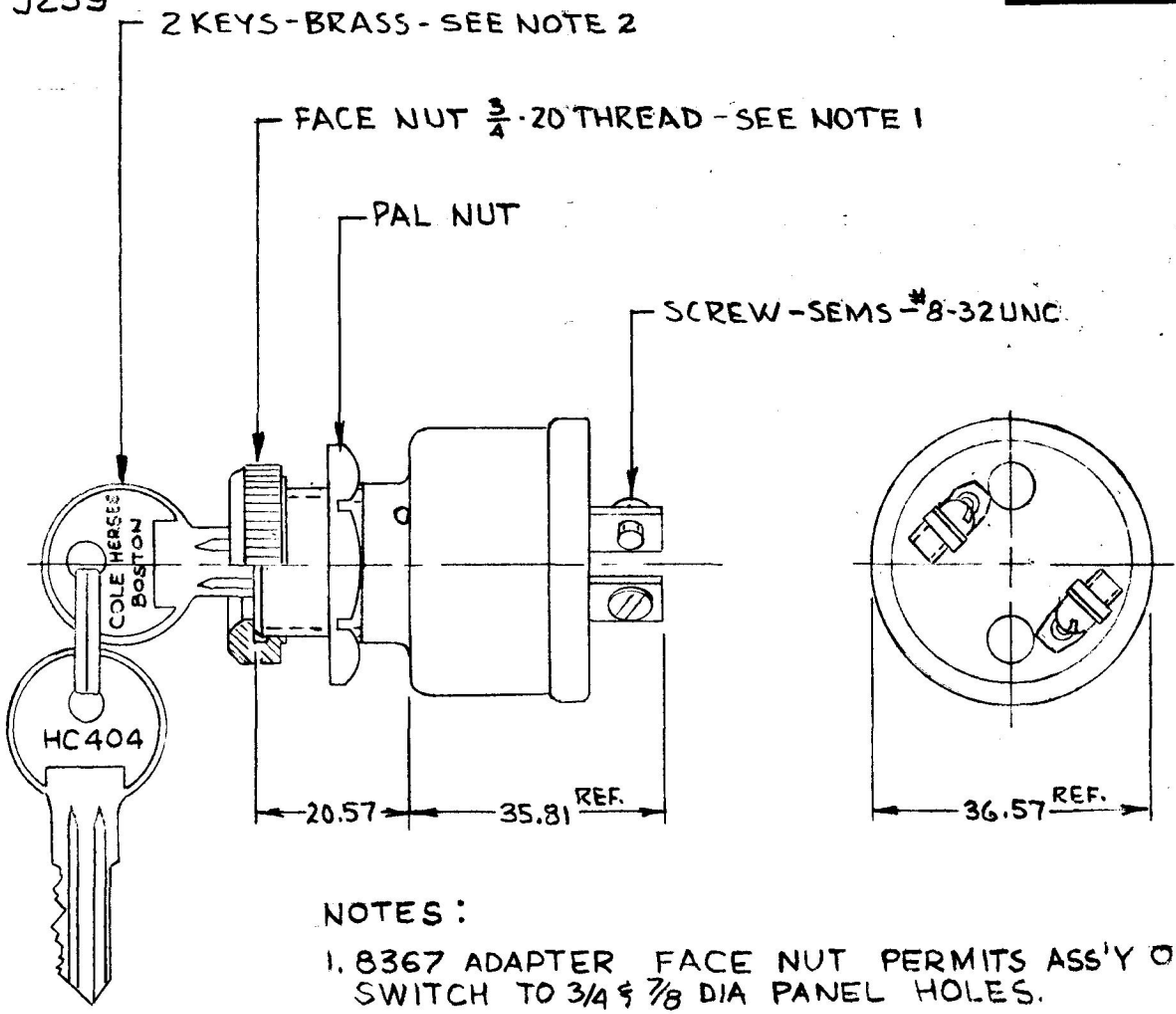

NOTES:

1. 8367 ADAPTER FACE NUT PERMITS ASS'Y OF SWITCH TO 3/4 & 7/8 DIA PANEL HOLES.
2. 250 KEY COMBINATIONS
3. ALL STEEL PARTS PLATED

EX15997

METRIC 10 AMPS @ 12V DC

DO NOT SCALE

LET.	WAS	DATE	BY	LET	WAS	DATE	BY
				R	ADD METRICS	6-22-88	RJF
				P	REDRAWN	12-5-86	ZU

MATERIAL	DRAWN	CHECKED	APPRV'D.	SCALE		DATE DRAWN
	AA			1:1		12-11-57
FINISH	Cole Hersee Co. 20 OLD COLONY AVENUE SOUTH BOSTON MA. U.S.A. 02127					DATE BLUEPRINT
TOLERANCES DECIMAL ± METRIC ±	S.P.S.T. SWITCH					9577

CH-188(4-78)

Confidential Property of Cole Hersee