THIS DRAWING AND THE INFORMATION CONTAINED WITHIN IT ARE CONFIDENTIAL AND MAY NOT BE COPIED OR DISCLOSED WITHOUT THE WRITTEN PERMISSION OF LITTELFUSE.

REVISIONS				
ZONE	REV.	DESCRIPTION	DATE	APPROVED
	A	GCF#525135 INITIAL RELEASE	JAN./30/2022	D. ZHANG

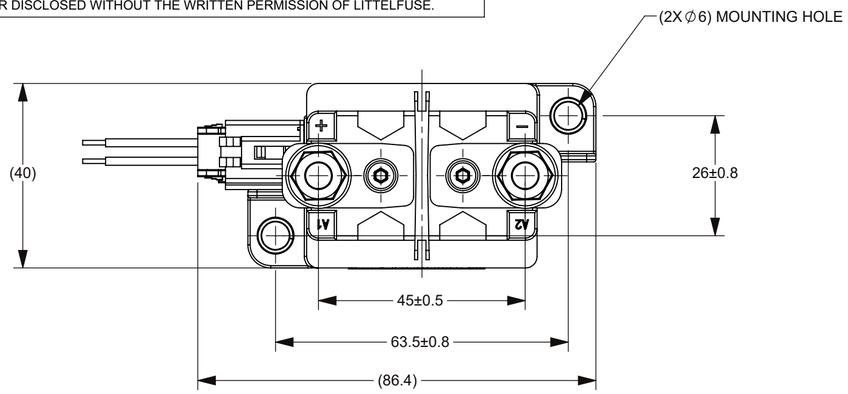

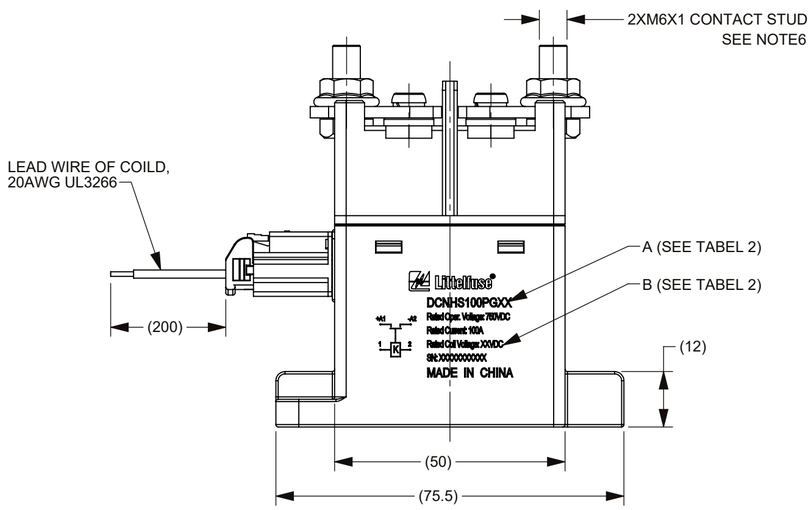

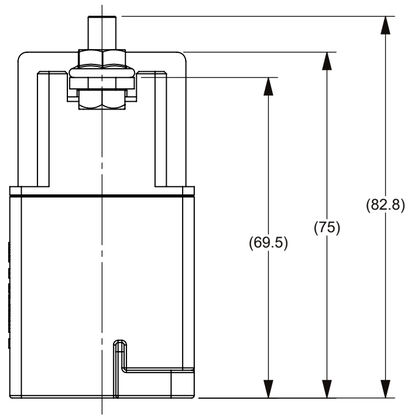

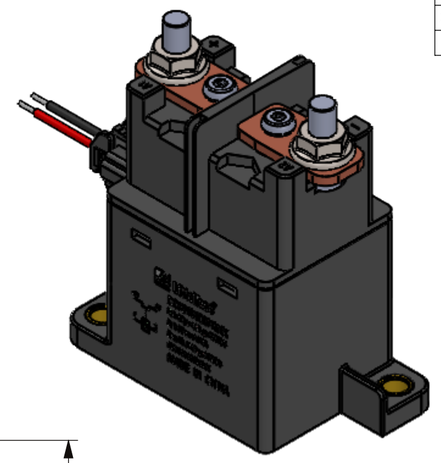

CIRCUIT SCHEMATIC DIAGRAM

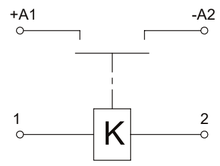

TABLE 1: TECHNICAL PARAMETERS

ITEM		PARAMETER		
		DCNHS100PG12	DCNHS100PG24	DCNHS100PG48
RATED COIL VOLTAGE		12V DC	24V DC	48V DC
OPERATING VOLTAGE IN COLD STATE AT (20±5)°C	PICKUP (V DC)	MAX 8.4	MAX 16.8	MAX 33.6
	RELEASE(V DC)	MIN 1	MIN 1.9	MIN 3.8
OPERATE TIME		MAX 30ms		
RELEASE TIME		MAX 30ms		
BOUNCE TIME		MAX 7ms		
MAIN CONTACT RESISTANCE (@ 100A)		MAX 2mΩ		
DIELECTRIC STRENGTH (LEAKAGE CURRENT ≤1 mA)		2500V AC, 50Hz,1min.		
INSULATION RESISTANCE		≥100MΩ @500VDC		
RATED CONTACT VOLTAGE		750V DC		
MAXIMUM CONTACT VOLTAGE		1000V DC		
RATED CONTACT CURRENT		100A		
LIMIT BREAKING ABILITY		4Ie/5ms,1 CYCLES		
ELECTRIC LIFE		5000 CYCLES @750V		
MECHANICAL LIFE		200000 CYCLES		
WORKING DUTY		CONTINUOUS		

TABLE 2: PARTS CONFIGURATION RELATION

PRODUCT PN	RATED COIL VOLTAGE (V DC)	"A" ON NAMEPLATE	"B" ON NAMEPLATE
DCNHS100PG12	12	DCNHS100PG12	12VDC
DCNHS100PG24	24	DCNHS100PG24	24VDC
DCNHS100PG48	48	DCNHS100PG48	48VDC

NOTES:
1. ALL SIZES ARE FOR REFERENCE ONLY.
2. MATERIALS AND FINISHED:
2.1 HOUSING: THERMOSETTING PLASTIC, UL94V-0.
2.2 CONTACTS: SILVER ALLOY.
3. PRODUCT PN AND NAMEPLATE CONFIGURATION RELATION SEE TABLE 2.
4. PRODUCT TECHNICAL PARAMETERS: SEE TABLE 1.
5. MAIN CONTACT ARRANGEMENT: SPST-NO.
6. CONNECTION BOLT: M6 BOLT, RECOMMENDED TORQUE 4 N•m ~ 6 N•m.
7. MOUNTING: M6 BOLT, RECOMMENDED TORQUE 4 N•m ~ 6 N•m.

DIMENSIONS ARE SHOWN IN MILLIMETERS. DIMENSIONS AND TOLERANCES ARE DEFINED ACCORDING TO ANSI/ASME Y14.5-1994.

PER CHI-NPD20-0008 PROCEDURE

●	FIT/ FUNCTION CRITICAL CHARACTERISTICS
<S>	SAFETY/ COMPLIANCE CRITICAL CHARACTERISTICS SYMBOL
CPK	DENOTES CPK DIMENSIONS MINIMUM CPK VALUE
(ST)	DENOTES A CHARACTERISTIC THAT PROVIDES AN INDICATION OF PROCESS PERFORMANCE.PROCEDURE FOR MEASUREMENTAND TRACKINGTO BE DEFINED IN LITTELFUSE INSPECTION INSTRUCTIONS
CP	DENOTES CP DIMENSIONS, -MINIMUM CP VALUE MUST BE WITHIN THE DIMENSIONAL LIMITATIONS SHOWN ON DRAWING AND INITIALLY LOCATED TO ALLOW FOR MAXIMUM TOOL LIFE

	NAME	DATE
DRAWN	V. ZHANG	JAN./19/2022
CHECKED	J. LI	JAN./30/2022
	-	-
	-	-

FORM NO: CVP-PE40-0005 REV B

THIRD ANGLE PROJECTION

DO NOT SCALE DRAWING

Littelfuse®
Expertise Applied | Answers Delivered

TITLE
DCNHS 100A 750V COIL CONTACTOR

SIZE	DWG. NO.		REV.
C	OUTLINE	OL-DCNHS100PG,CHART	A

SCALE 1:1 SHEET 1 OF 1