THIS DRAWING AND THE INFORMATION CONTAINED WITHIN IT ARE CONFIDENTIAL AND MAY NOT BE COPIED OR DISCLOSED WITHOUT THE WRITTEN PERMISSION OF LITTELFUSE.

REVISIONS				
ZONE	REV.	DESCRIPTION	DATE	APPROVED
	A	GCF#524592 INITIAL RELEASE	SEP./23/2021	D. ZHANG

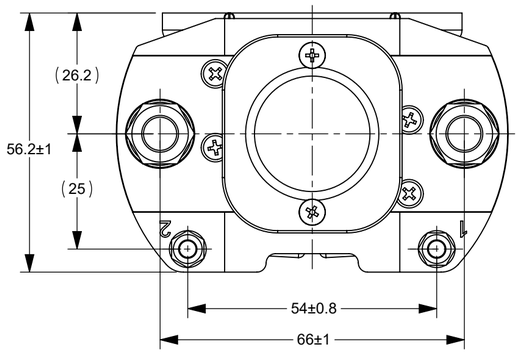

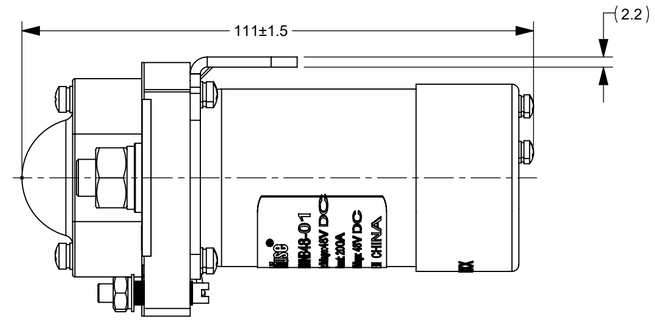

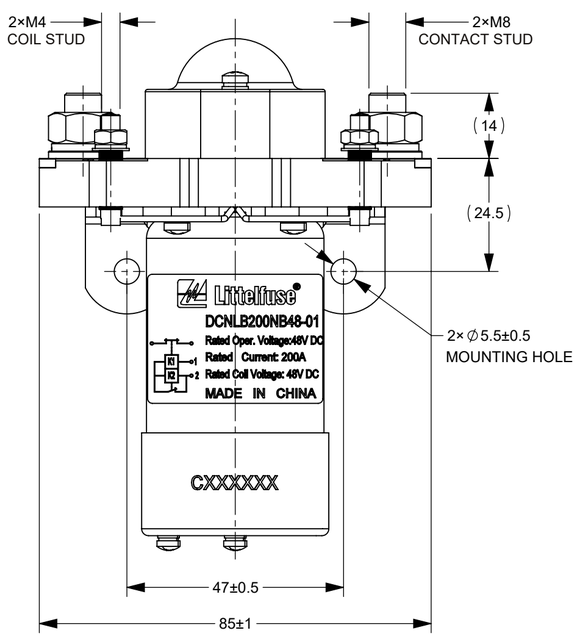

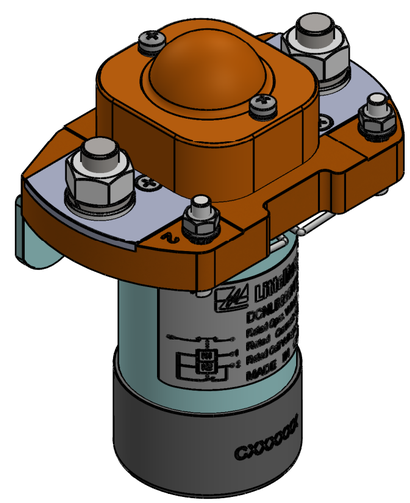

TABLE 1: TECHNICAL PARAMETERS		
ITEM	PARAMETER	
MAXIMUM CONTACT VOLTAGE	60V DC	
RATED CONTACT VOLTAGE	48V DC	
RATED CONTACT CURRENT	200A	
RATED COIL VOLTAGE	48V DC	
HOLD POWER	START POWER	MAX 230W
	MAINTAIN POWER	MAX 8W
OPERATING VOLTAGE IN COLD STATE AT (20±5)°C	PICKUP: 34V DC MAX	
	RELEASE: 4V DC MIN	
OPERATE TIME	MAX 30ms	
RELEASE TIME	MAX 30ms	
BOUNCE TIME	MAX 12ms	
CONTACT VOLTAGE DROP	≤50mV@100 A	
LIMIT BREAKING ABILITY	4Ie/5ms,1CYCLES	
DIELECTRIC STRENGTH	1000V AC, 50Hz,1min., LEAKAGE CURRENT ≤1 mA	
INSULATION RESISTANCE	≥50MΩ@500VDC	
ELECTRIC LIFE	3000 CYCLES	
MECHANICAL LIFE	100,000 CYCLES	
WORKING DUTY	CONTINUOUS	

NOTES:
1. ALL SIZES ARE FOR REFERENCE ONLY.
2. MATERIALS AND FINISHING:
2.1 BASE: THERMOSETTING PLASTIC, UL94V-0.
2.2 CONTACTS: SILVER ALLOY.
2.3 COIL STUD: COPPER ALLY, SILVER PLATED.
3. PRODUCT TECHNICAL PARAMETERS: SEE TABLE 1.
3.1 CONTACT ARRANGEMENT: SPST-NC.
3.2 CONNECTION STUD: M8 STUD, RECOMMENDED TORQUE 9 N•m ~ 11 N•m;
M4 STUD, RECOMMENDED TORQUE 1.7 N•m ~ 2.5 N•m.
3.3 MOUNTING: M5 BOLT, RECOMMENDED TORQUE 4 N•m ~ 5 N•m.

CIRCUIT SCHEMATIC DIAGRAM

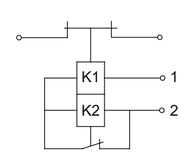

DIMENSIONS ARE SHOWN IN MILLIMETERS. DIMENSIONS AND TOLERANCES ARE DEFINED ACCORDING TO ANSI/ASME Y14.5-1994.

PER CHI-NPD20-0008 PROCEDURE

●	FIT/ FUNCTION CRITICAL CHARACTERISTICS
<S>	SAFETY/ COMPLIANCE CRITICAL CHARACTERISTICS SYMBOL
CPK	DENOTES CPK DIMENSIONS MINIMUM CPK VALUE
ST	DENOTES A CHARACTERISTIC THAT PROVIDES AN INDICATION OF PROCESS PERFORMANCE.PROCEDURE FOR MEASUREMENTAND TRACKINGTO BE DEFINED IN LITTELFUSE INSPECTION INSTRUCTIONS
CP	DENOTES CP DIMENSIONS, -MINIMUM CP VALUE MUST BE WITHIN THE DIMENSIONAL LIMITATIONS SHOWN ON DRAWING AND INITIALLY LOCATED TO ALLOW FOR MAXIMUM TOOL LIFE

	NAME	DATE
DRAWN	JY. SHI	SEP./6/2021
CHECKED	J. LI	SEP./15/2021
	-	-
	-	-

FORM NO: CVP-PE40-0005 REV B

THIRD ANGLE PROJECTION

DO NOT SCALE DRAWING

Littelfuse
Expertise Applied | Answers Delivered

TITLE: DCNLB 200A 48V 48V COIL CONTACTOR

SIZE C | DWG. NO. OUTLINE OL-DCNLB200NB48-01 | REV. A

SCALE 1:1 | SHEET 1 OF 1