THIS DRAWING AND THE INFORMATION CONTAINED WITHIN IT ARE CONFIDENTIAL AND MAY NOT BE COPIED OR DISCLOSED WITHOUT THE WRITTEN PERMISSION OF LITTELFUSE.

REVISIONS				
ZONE	REV.	DESCRIPTION	DATE	APPROVED
	A	GCF#524670 INITIAL RELEASE	OCT./25/2021	D. ZHANG

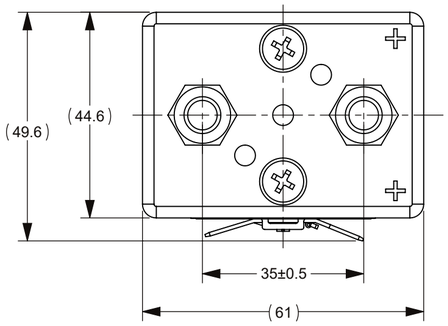

CIRCUIT SCHEMATIC DIAGRAM

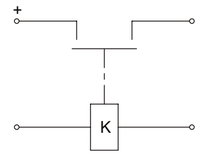

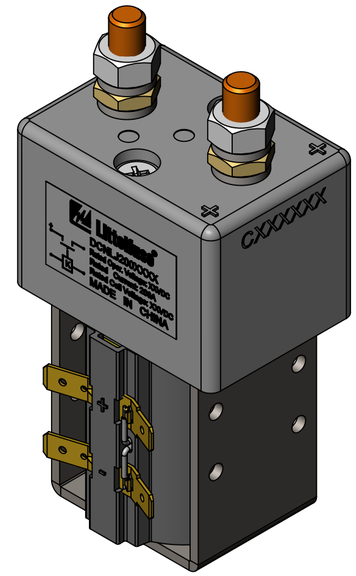

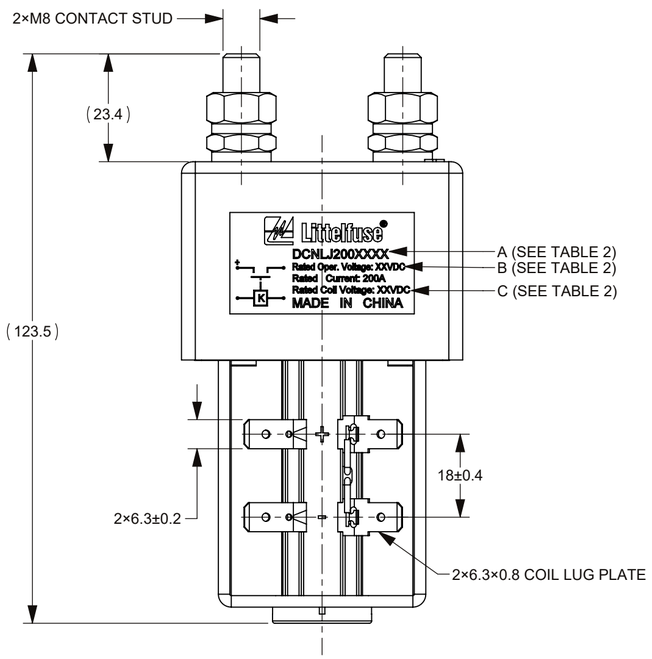

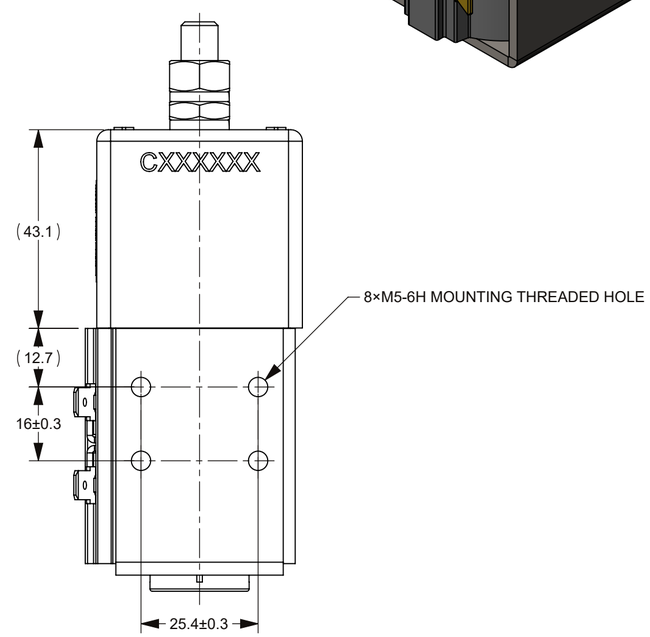

TECHNICAL PARAMETERS 1					
ITEM		PARAMETER			
		DCNLJ200NB24	DCNLJ200PD24	DCNLJ200NB48	DCNLJ200NB60
RATED COIL VOLTAGE		24V DC	24V DC	48V DC	60V DC
HOLD POWER		MAX 15W	MAX 15W	MAX 15W	MAX 17W
OPERATING VOLTAGE IN COLD STATE AT (20±5)°C	PICKUP(V DC)	MAX 16.8	MAX 16.8	MAX 33.6	MAX 42.0
	RELEASE(V DC)	MIN 2.0	MIN 2.0	MIN 4.0	MIN 4.5
OPERATE TIME		MAX 50ms			
RELEASE TIME		MAX 25ms			
BOUNCE TIME		MAX 7ms			
CONTACT VOLTAGE DROP		≤50mV@100 A			
DIELECTRIC STRENGTH		1000V AC, 50Hz,1min., LEAKAGE CURRENT ≤1 mA			
INSULATION RESISTANCE		≥50MΩ@500VDC			
RATED CONTACT VOLTAGE		48V DC	96V DC	48V DC	48V DC
MAXIMUM CONTACT VOLTAGE		60V DC	110V DC	60V DC	60V DC
RATED CONTACT CURRENT		200A			
LIMIT BREAKING ABILITY		4Ie/5ms,1CYCLES			
ELECTRIC LIFE		6000 CYCLES			
MECHANICAL LIFE		100,000 CYCLES			
WORKING DUTY		CONTINUOUS			

TABLE 2			
PRODUCT NUMBER	"A"	"B"	"C"
DCNLJ200NB24	DCNLJ200NB24	Rated Oper. Voltage: 48VDC	Rated Coil Voltage: 24VDC
DCNLJ200PD24	DCNLJ200PD24	Rated Oper. Voltage: 96VDC	Rated Coil Voltage: 24VDC
DCNLJ200NB48	DCNLJ200NB48	Rated Oper. Voltage: 48VDC	Rated Coil Voltage: 48VDC
DCNLJ200NB60	DCNLJ200NB60	Rated Oper. Voltage: 48VDC	Rated Coil Voltage: 60VDC

NOTES:
1. ALL SIZES ARE FOR REFERENCE ONLY.
2. MATERIALS AND FINISHING:
2.1 BASE: PHENOLPLASTIC, UL94V-0.
2.2 CONTACTS: SILVER ALLOY.
2.3 STUD: COPPER ROD.
2.4 COIL LUG PLATE: BRASS STRIP.
3. PRODUCT TECHNICAL PARAMETERS: SEE TABLE 1.
4. PRODUCT AND NAMEPLATE(THE CHARACTER CONTENT AT "A", "B" AND "C") CONFIGURATION SEE TABLE 2.
5. CONTACT ARRANGEMENT: SPST-NO.
6. CONNECTION STUD: M8 STUD, RECOMMENDED TORQUE: 8 N•m ~ 9 N•m.
7. MOUNTING: M5 BOLT, RECOMMENDED TORQUE: 4 N•m-5 N•m.

DIMENSIONS ARE SHOWN IN MILLIMETERS. DIMENSIONS AND TOLERANCES ARE DEFINED ACCORDING TO ANSI/ASME Y14.5-1994.

PER CHI-NPD20-0008 PROCEDURE

●	FIT/ FUNCTION CRITICAL CHARACTERISTICS
<S>	SAFETY/ COMPLIANCE CRITICAL CHARACTERISTICS SYMBOL
CPK	DENOTES CPK DIMENSIONS MINIMUM CPK VALUE
⟨ST⟩	DENOTES A CHARACTERISTIC THAT PROVIDES AN INDICATION OF PROCESS PERFORMANCE.PROCEDURE FOR MEASUREMENTAND TRACKINGTO BE DEFINED IN LITTELFUSE INSPECTION INSTRUCTIONS
CP	DENOTES CP DIMENSIONS, -MINIMUM CP VALUE MUST BE WITHIN THE DIMENSIONAL LIMITATIONS SHOWN ON DRAWING AND INITIALLY LOCATED TO ALLOW FOR MAXIMUM TOOL LIFE

	NAME	DATE
DRAWN	MJ. DAI	OCT./25/2021
CHECKED	J. LI	OCT./30/2021
	-	-
	-	-

FORM NO: CVP-PE40-0005 REV B

THIRD ANGLE PROJECTION

DO NOT SCALE DRAWING

Littelfuse
Expertise Applied | Answers Delivered

TITLE
DCNLJ 200A CONTACTOR

SIZE C | DWG. NO. OUTLINE OL-DCNLJ200,CHART | REV. A

SCALE 1:1 | SHEET 1 OF 1