THIS DRAWING AND THE INFORMATION CONTAINED WITHIN IT ARE CONFIDENTIAL AND MAY NOT BE COPIED OR DISCLOSED WITHOUT THE WRITTEN PERMISSION OF LITTELFUSE.

REVISIONS

ZONE	REV.	DESCRIPTION	DATE	APPROVED
	A	GCF#524336 INITIAL RELEASE	AUG./15/2021	D. ZHANG
B1; D1	B	CCO-100372 60ms was 50ms; 50MΩ was 20MΩ	Oct./12/2022	D. ZHANG

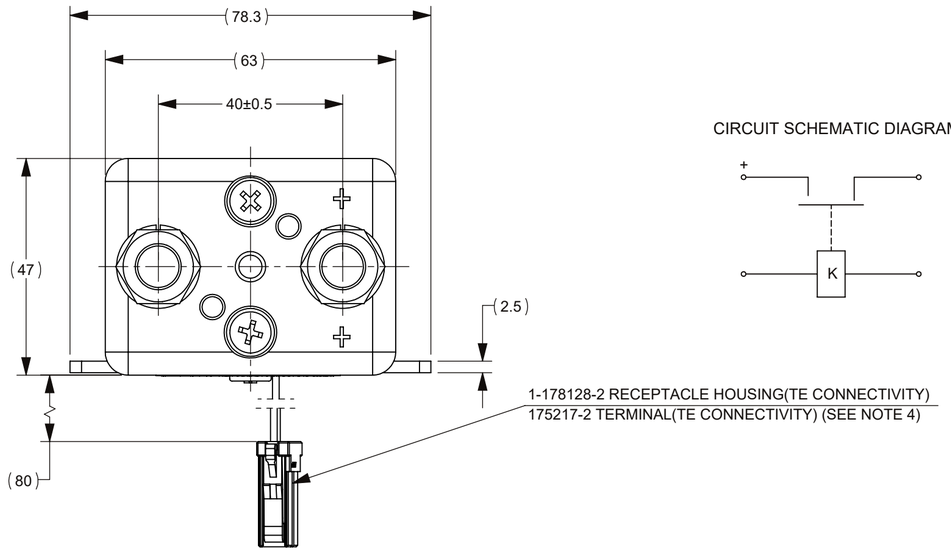

CIRCUIT SCHEMATIC DIAGRAM

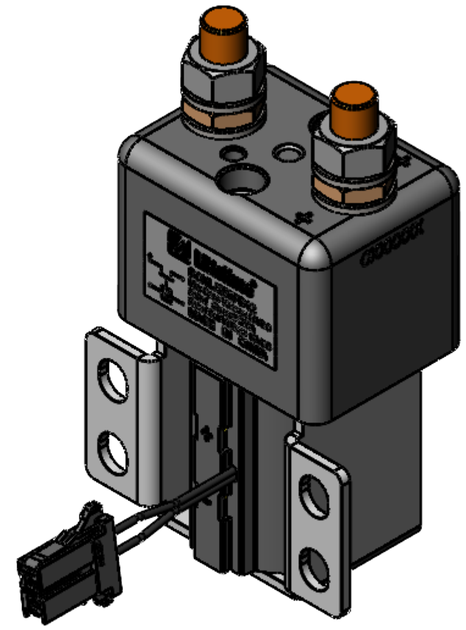

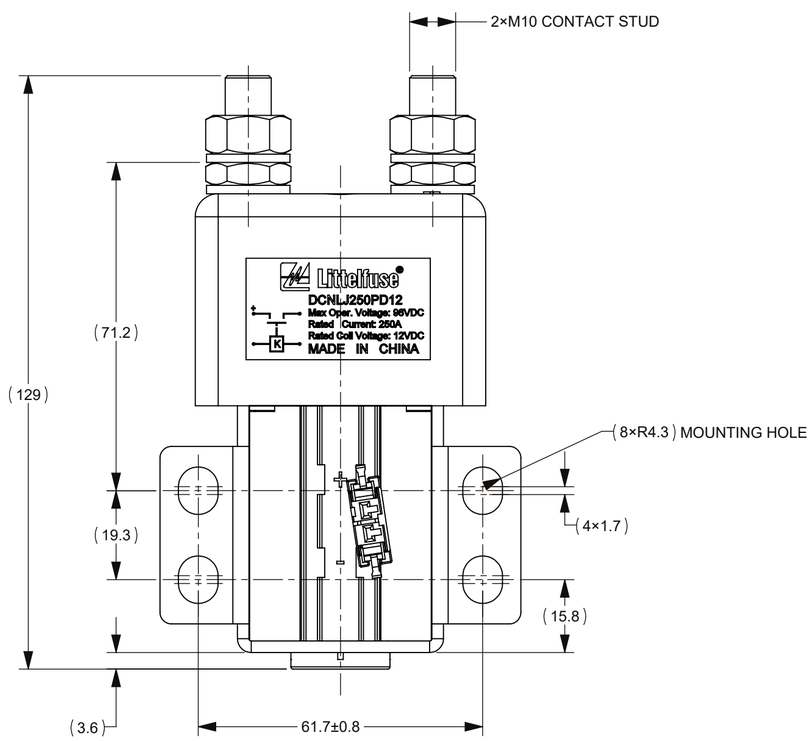

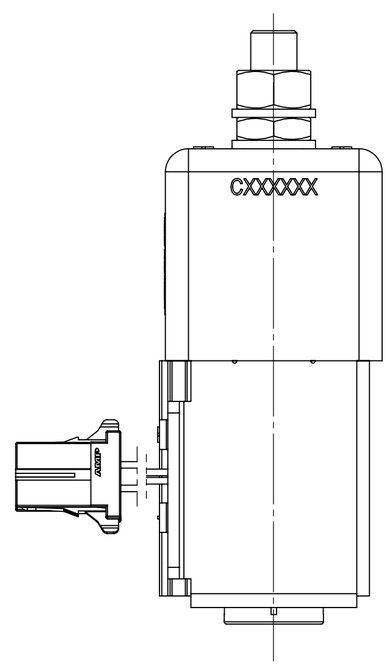

TABLE 1: TECHNICAL PARAMETERS

ITEM	PARAMETER
RATED COIL VOLTAGE	12V DC
HOLD POWER	MAX 16W
OPERATING VOLTAGE IN COLD STATE AT (20±5)°C	PICKUP: 8.4V DC MAX
	RELEASE: 1V DC MIN
OPERATE TIME (B)	MAX 60ms
RELEASE TIME	MAX 25ms
BOUNCE TIME	MAX 7ms
RATED CONTACT VOLTAGE	96V DC
MAXIMUM CONTACT VOLTAGE	110V DC
RATED CONTACT CURRENT	250A
CONTACT VOLTAGE DROP	≤50mV@100 A
LIMIT BREAKING ABILITY	4Ie/5ms,1CYCLES
DIELECTRIC STRENGTH	1000V AC, 50Hz,1min, LEAKAGE CURRENT ≤1 mA
INSULATION RESISTANCE (B)	≥50MΩ@500VDC
ELECTRIC LIFE	6000 CYCLES
MECHANICAL LIFE	300,000 CYCLES
WORKING DUTY	CONTINUOUS

NOTES:
1. ALL SIZES ARE FOR REFERENCE ONLY.
2. MATERIALS AND FINISH:
2.1 BASE: PHENOLPLASTIC, UL94V-0.
2.2 CONTACTS: SILVER ALLOY.
2.3 STUD: COPPER ROD.
3. PRODUCT TECHNICAL PARAMETERS: SEE TABLE 1.
4. CONNECTORS MATCH: TE CONNECTIVITY: 1-917337-2 OR 1-179276-2 RECOMMENDED.
5. CONTACT ARRANGEMENT: SPST-NO.
6. CONNECTION STUD: M10 STUD, RECOMMENDED TORQUE: 9 N•m ~ 11 N•m.
7. MOUNTING: M8 BOLT, RECOMMENDED TORQUE: 12 N•m-15 N•m.

DIMENSIONS ARE SHOWN IN MILLIMETERS. DIMENSIONS AND TOLERANCES ARE DEFINED ACCORDING TO ANSI/ASME Y14.5-1994.

PER CHI-NPD20-0008 PROCEDURE

●	FIT/ FUNCTION CRITICAL CHARACTERISTICS
<S>	SAFETY/ COMPLIANCE CRITICAL CHARACTERISTICS SYMBOL
CPK	DENOTES CPK DIMENSIONS MINIMUM CPK VALUE
⟨ST⟩	DENOTES A CHARACTERISTIC THAT PROVIDES AN INDICATION OF PROCESS PERFORMANCE.PROCEDURE FOR MEASUREMENTAND TRACKINGTO BE DEFINED IN LITTELFUSE INSPECTION INSTRUCTIONS
CP	DENOTES CP DIMENSIONS, -MINIMUM CP VALUE MUST BE WITHIN THE DIMENSIONAL LIMITATIONS SHOWN ON DRAWING AND INITIALLY LOCATED TO ALLOW FOR MAXIMUM TOOL LIFE

	NAME	DATE
DRAWN	MJ. DAI	AUG./15/2021
CHECKED	J. LI	AUG./20/2021
	-	-
	-	-

FORM NO: CVP-PE40-0005 REV B

THIRD ANGLE PROJECTION

DO NOT SCALE DRAWING

Littelfuse
Expertise Applied | Answers Delivered

TITLE
DCNL 250A 96V 12V COIL CONTACTOR

SIZE	DWG. NO.	REV.
C	OUTLINE OL-DCNLJ250PD12	B

SCALE 1:1 SHEET 1 OF 1