THIS DRAWING AND THE INFORMATION CONTAINED WITHIN IT ARE CONFIDENTIAL AND MAY NOT BE COPIED OR DISCLOSED WITHOUT THE WRITTEN PERMISSION OF LITTELFUSE.

REVISIONS				
ZONE	REV.	DESCRIPTION	DATE	APPROVED
	A	GCF#523779 INITIAL RELEASE	Jun./20/2021	D. ZHANG
1B	B	ECR#524964 CORRECT TYPO:50MΩ WAS 2MΩ	4/1/2022	D. ZHANG

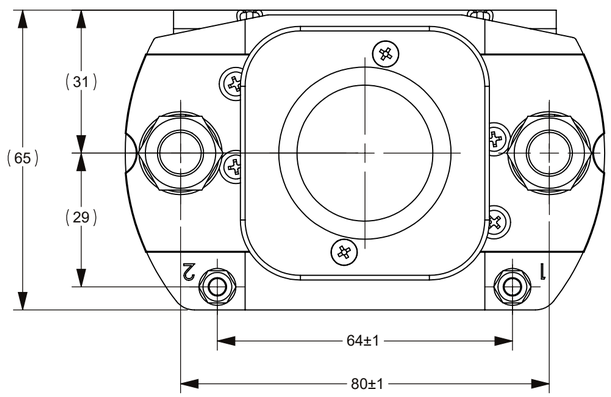

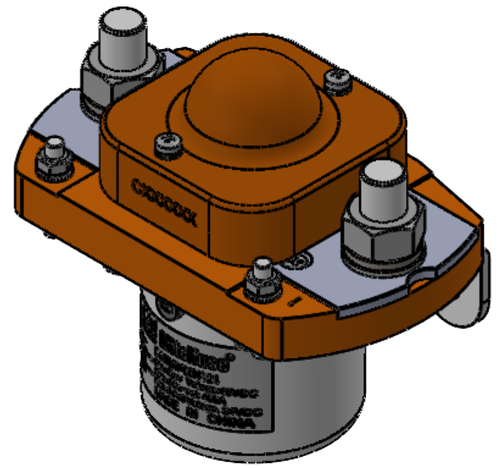

CIRCUIT SCHEMATIC DIAGRAM

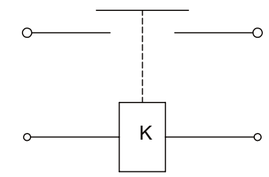

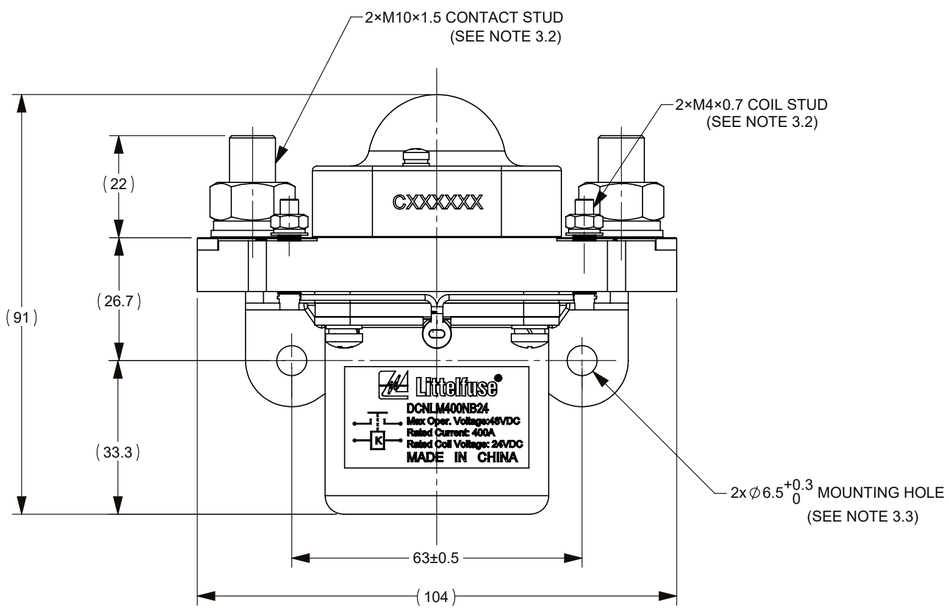

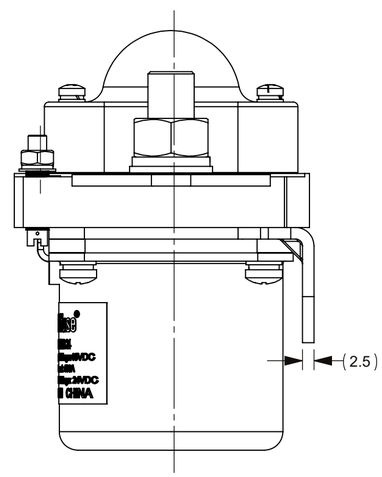

TECHNICAL PARAMETERS 1	
ITEM	PARAMETER
RATED COIL VOLTAGE	24V DC
HOLD POWER	MAX15W
OPERATING VOLTAGE IN COLD STATE AT (20±5)°C	PICKUP: 16.8V DC MAX
	RELEASE: 2V DC MIN
OPERATE TIME	MAX 40ms
RELEASE TIME	MAX 20ms
BOUNCE TIME	MAX 5ms
RATED CONTACT VOLTAGE	48V DC
MAXIMUM CONTACT VOLTAGE	60V DC
RATED CONTACT CURRENT	400A
CONTACT VOLTAGE DROP	≤50mV@100 A
LIMIT BREAKING ABILITY	4Ie/5ms,1CYCLES
DIELECTRIC STRENGTH	1000V AC, 50Hz,1min,LEAKAGE CURRENT ≤1 mA
B INSULATION RESISTANCE	≥50MΩ@500VDC
ELECTRIC LIFE	6000 CYCLES
MECHANICAL LIFE	100,000 CYCLES
WORKING DUTY	CONTINUOUS

NOTES:
1. ALL SIZES ARE FOR REFERENCE ONLY.
2. MATERIALS AND FINISHED PRODUCTS:
2.1 BASE: THERMOSETTING PLASTIC, UL94V-0.
2.2 CONTACTS: SILVER ALLOY.
2.3 COIL STUD: COPPER ALLY, SILVER PLATED.
3. PRODUCT TECHNICAL PARAMETERS: SEE TABLE 1.
3.1 CONTACT ARRANGEMENT: SPST-NO.
3.2 CONNECTION TERMINAL: MAIN CONTACT TERMINAL M10 STUD; COIL TERMINAL M4 STUD; M10 NUT MOUNTING TORQUE : 15 N•m ~ 18 N•m; M4 NUT MOUNTING TORQUE: 1.7N•m ~ 2.5N•m.
3.3 MOUNTING BOLT M6. TORQUE 6N•m-8N•m.

DIMENSIONS ARE SHOWN IN MILLIMETERS. DIMENSIONS AND TOLERANCES ARE DEFINED ACCORDING TO ANSI/ASME Y14.5-1994.

PER CH-NPD20-0008 PROCEDURE

●	FIT/ FUNCTION CRITICAL CHARACTERISTICS
<S>	SAFETY/ COMPLIANCE CRITICAL CHARACTERISTICS SYMBOL
CPK	DENOTES CPK DIMENSIONS MINIMUM CPK VALUE
(ST)	DENOTES A CHARACTERISTIC THAT PROVIDES AN INDICATION OF PROCESS PERFORMANCE.PROCEDURE FOR MEASUREMENTAND TRACKINGTO BE DEFINED IN LITTELFUSE INSPECTION INSTRUCTIONS
CP	DENOTES CP DIMENSIONS, -MINIMUM CP VALUE MUST BE WITHIN THE DIMENSIONAL LIMITATIONS SHOWN ON DRAWING AND INITIALLY LOCATED TO ALLOW FOR MAXIMUM TOOL LIFE

	NAME	DATE
DRAWN	MJ. DAI	Jun./20/2021
CHECKED	J. LI	Jun./25/2021
	-	-
	-	-

FORM NO: CVP-PE40-0005 REV B

THIRD ANGLE PROJECTION

DO NOT SCALE DRAWING

Littelfuse
Expertise Applied | Answers Delivered

TITLE
DCNL 400A 48V 24V COIL CONTACTOR

SIZE	DWG. NO.	REV.
C	OUTLINE OL-DCNLM400NB24	B

SCALE 1:1 SHEET 1 OF 1